PROJECT

TENANT IMPROVEMENT
Wauwatosa, Wisconsin

CONSULTANTS

Landscape	Builder	Architectural	Structural	Plumbing	Mechanical	Electrical
TBD		Striegel-Agacki Studio	REYN Engineering	Design-Build	Design-Build	Design-Build
		1430 Underwood Avenue Wauwatosa, Wisconsin 53213 Ph 414 793.3586	131 West Seeboth Suite 220 Milwaukee, Wisconsin 53204 Ph 414-254-8526			

DRAWINGS

STRIEGEL AGACKI STUDIO
1430 UNDERWOOD
WAUWATOSA, WI 53213
TEL 414.793.3586

Owner:
North 7200, LLC
PO BOX 510932
MILWAUKEE, WI 53203

DATE	NO.	REVISION
04-10-25		PROGRESS SET

project name

TENANT IMPROVEMENT

7200 W. NORTH AVENUE
WAUWATOSA, WI 53213

ISSUED FOR REVIEW
NOT FOR CONSTRUCTION

SCALE:
COMPUTER FILE:
DRAWN BY:
PLOT DATE:
JOB NUMBER:
TITLE:
TITLE SHEET

SHEET NUMBER

T100

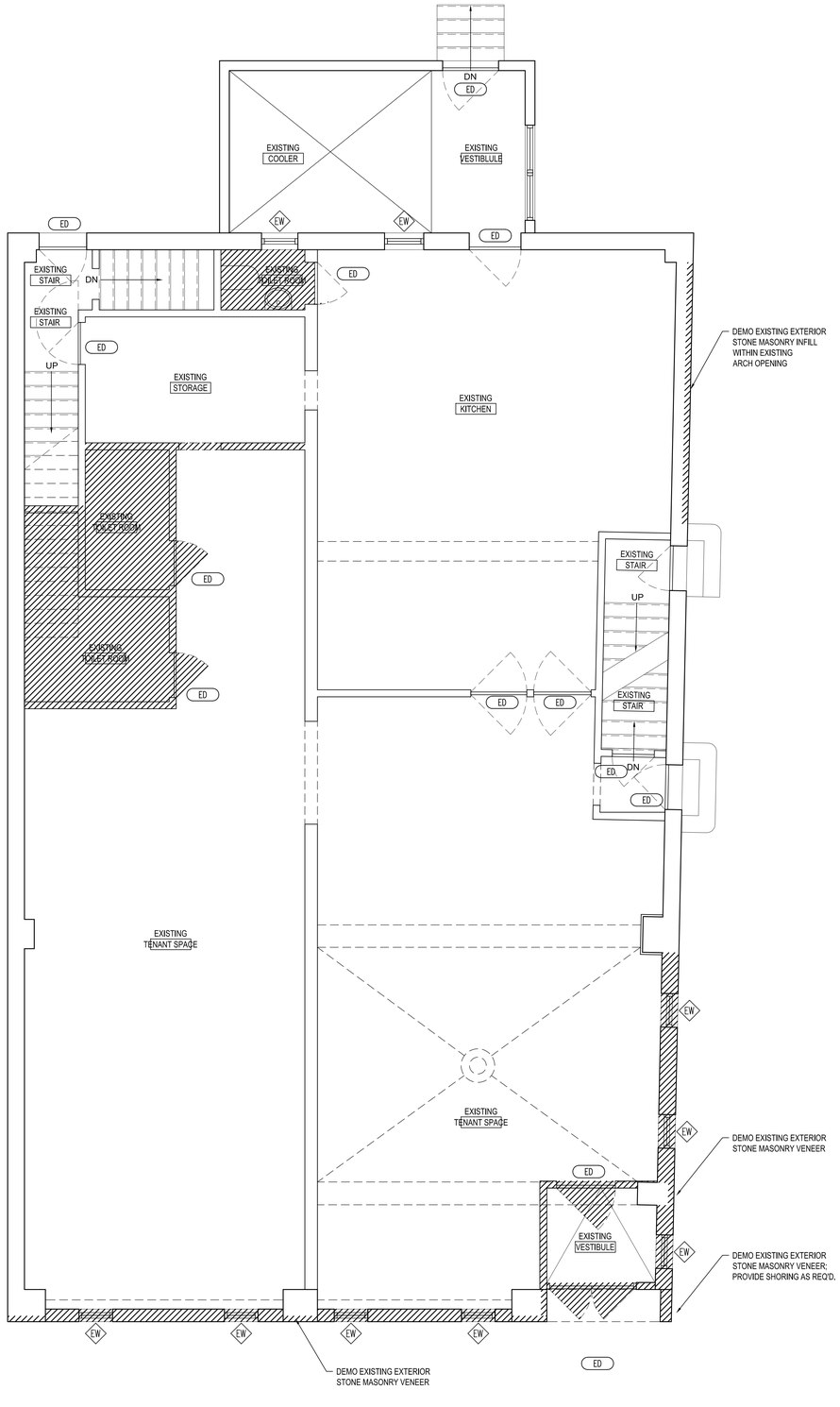

1 A001 DEMOLITION PLAN
SCALE: 1/4"=1'-0"

GENERAL DEMOLITION NOTES

1. THE DEMOLITION WORK SHOWN HERE IS OF A GENERAL NATURE. THE CONTRACTOR SHALL BECOME FAMILIAR WITH ALL EXISTING CONDITIONS PRIOR TO SUBMITTING BID, NOTIFY THE DESIGNER OF ANY INCOMPATIBILITY BETWEEN NEW AND EXISTING CONSTRUCTION AND THE INABILITY OF THE EXISTING CONSTRUCTION TO BE PROVIDED OR PERFORMED ITS SPECIFIC REQUIREMENT.

2. THE CONTRACTOR SHALL FURNISH ALL LABOR, MATERIAL, EQUIPMENT, ETC. REQUIRED TO COMPLETE THE DEMOLITION OF ALL ITEMS SHOWN ON THESE PLANS INCLUDING ITEMS NOT SHOWN WHICH ARE REQUIRED FOR REMOVAL OR SALVAGE UNLESS DESIGNATED N.I.C. (NOT IN CONTRACT).

3. WHERE EXISTING ASSEMBLIES ARE SHOWN TO BE REMOVED WITHIN THE SCOPE OF WORK, INCLUDE THE CONTROLLED AND COMPLETE REMOVAL OF THESE ITEMS AND ANY ASSOCIATED ITEMS NECESSARY FOR THE EXECUTION OF THE WORK.

4. CONTRACTOR SHALL REVIEW ANY AND ALL ITEMS OF DEMOLITION WITH DESIGNER/OWNER NOT IMPLIED OR SPECIFIED ON DRAWINGS OR SPECIFICATIONS AND TO INCLUDE SUCH COSTS IN BID UNLESS OTHERWISE ADVISED.

5. CONTRACTOR SHALL TAKE ALL PRECAUTIONS TO MAINTAIN FREE PROTECTED ACCESS OF OWNER, SERVICE PERSONNEL AND THE PUBLIC THROUGH THE AREAS INVOLVED AND AFFECTED BY CONSTRUCTION FREE OF SOIL, DEBRIS, TRASH, ETC. ON A DAILY BASIS.

6. REMOVAL AS DESCRIBED HEREIN SHALL BE ACCOMPLISHED WITHOUT STORING ON THE FLOOR EXCESSIVE QUANTITIES OF ANY MATERIALS, RUBBISH, DIRT, DEBRIS, OR WASTE OF ANY SORT RESULTING FROM THE REMOVAL OPERATIONS ON THE FLOOR.

7. NOISE ABATEMENT: NOISE SHALL BE KEPT AT A REASONABLE LEVEL AS RELATED TO SPECIFIC ITEMS OF EQUIPMENT USED AND THEIR HOURS OF USE.

8. ALL AREAS REQUIRING PATCH DUE TO THE WORK OF THIS PROJECT, INCLUDING MARKS FROM RELOCATED WALLS, DAMAGE CAUSED BY REMOVING, RELOCATING, AND/OR ADDING FIXTURES AND EQUIPMENT, DAMAGES CAUSED BY DEMOLITION AT ADJACENT MATERIALS, ETC. SHALL BE EXPERTLY PATCHED BY JOURNEYMEN EXPERIENCED IN THE TRADE INVOLVED IN THE PATCHWORK.

9. PLUMBING DEMOLITION SHALL INCLUDE REMOVAL OF ALL FIXTURES AND APPLIANCES. VERIFY DISPOSAL OF ITEMS WITH OWNER PRIOR TO DISPOSAL.

STRIEGEL AGACKI STUDIO
1430 UNDERWOOD
WAUWATOSA, WI 53213
TEL 414.793.3586

Owner:

North 7200, LLC
PO BOX 510932
MILWAUKEE, WI 53203

DATE	NO.	REVISION
04-10-25		PROGRESS SET

project name

TENANT IMPROVEMENT

7200 W. NORTH AVENUE
WAUWATOSA, WI 53213

ISSUED FOR REVIEW
NOT FOR CONSTRUCTION

SCALE:
COMPUTER FILE:
DRAWN BY:
PLOT DATE:
JOB NUMBER:
TITLE:
FIRST FLOOR DEMOLITION PLAN

SHEET NUMBER
D101

CEILING NOTES

1. SOFFITS TO BE LIGHT GAUGE FRAMED, SUSPENDED GWB CEILING.

2. EMERGENCY LIGHTING AND LIGHTING IN PARKING AREAS BY DESIGN-BUILD ELECTRICAL SUBCONTRACTOR.

3. DESIGN-BUILD ELECTRICAL SUBCONTRACTOR TO VERIFY CODE REQUIRED LIGHTING LEVELS AND REVIEW WITH OWNER / ARCHITECT.

4. PROVIDE BLOCKING AND ARCHITECTURAL METALS TO SUPPORT ALL LIGHT FIXTURES..

5. COORDINATE SIZES, TYPES, LOCATIONS, & QUANTITIES OF ALL MEP RELATED FIXTURES, DEVICES, & EQUIPMENT.

6. EMERGENCY LIGHT LOCATIONS TO BE COORDINATED WITH ELECTRICAL CONTRACTOR, GENERAL CONTRACTOR, & LOCAL CODE OFFICIAL..

7. THE ELECTRICAL CONTRACTOR SHALL BE RESPONSIBLE FOR THE FINAL LIGHTING CALCULATIONS AND PHOTOMETRIC LIGHT LEVELS.

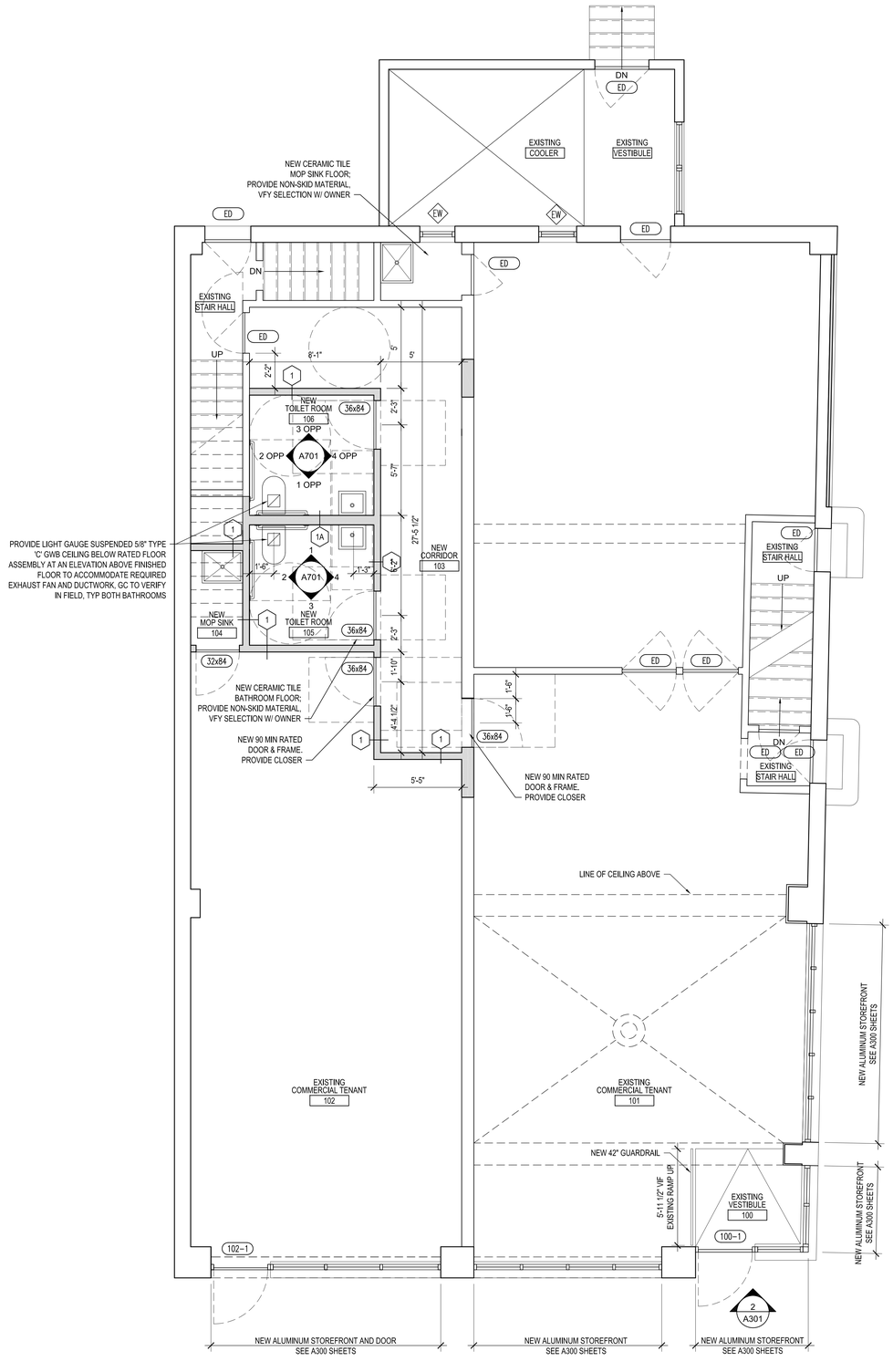

1 A101 PROPOSED NEW FIRST FLOOR PLAN
SCALE: 1/4"=1'-0"

FLOOR-CEILING SYSTEMS, WOOD-FRAMED

GA FILE NO. FC 5724	PROPRIETARY†	2 HOUR FIRE

WOOD FLOOR, WOOD JOISTS, GYPSUM WALLBOARD, RESILIENT CHANNELS

Base layer 5/8" proprietary type X gypsum wallboard or gypsum veneer base applied at right angles to 2 x 10 wood joists 16" o.c. with 8d nails, 2 1/2" long, 0.113" shank, 19/64" heads, 7" o.c. Resilient furring channels 24" o.c. applied at right angles to joists through base layer with one 8d nail, 2 1/2"long, 0.113" shank, 19/64" head, at each joist. **Face** layer 5/8" proprietary type X gypsum wallboard or gypsum veneer base applied at right angles to resilient furring channels with 1" Type S drywall screws 12" o.c. Double channel installed at face layer end joints. Wood joists supporting 1" nominal T & G wood subfloor and 1" nominal wood finish floor or 19/32" plywood finished floor with long edges T & G and 15/32" interior plywood with exterior glue subfloor perpendicular to joists with joints staggered.

Approx. Ceiling Weight: 6 psf
Fire Test: UL R2717-35, 10-21-64, UL Design L505; ULC Design M503

PROPRIETARY GYPSUM BOARD

American Gypsum Company	5/8" FIREBLOC TYPE C
CertainTeed Gypsum, Inc.	5/8" ProRock® Type C Gypsum Panels
CertainTeed Gypsum Canada, Inc.	5/8" ProRock® Type C Gypsum Panels
G-P Gypsum	5/8" ToughRock® Fireguard® C
Lafarge North America Inc.	5/8" Firecheck® Type C
National Gypsum Company	5/8" Gold Bond® Brand FIRE-SHIELD C™ Gypsum Wallboard
PABCO Gypsum	5/8" FLAME CURB® Super 'C'
Temple-Inland Forest Products Corporation	5/8" TG-C

†Contact the manufacturer for more detailed information on proprietary products.

3 A101 CEILING ASEMBLY #1
SCALE: 1/4"=1'-0"

WALLS AND INTERIOR PARTITIONS, NONCOMBUSTIBLE

GA FILE NO. WP 1522	GENERIC	2 HOUR FIRE	55 to 59 STC SOUND

GYPSUM WALLBOARD, STEEL STUDS

Base layer 5/8" type X gypsum wallboard or gypsum veneer base applied parallel or at right angles to each side of 3 5/8" steel studs 24" o.c. with 1" Type S drywall screws 24" o.c. **Face** layer 5/8" type X gypsum wallboard or gypsum veneer base applied parallel or at right angles to each side with 1 5/8" Type S drywall screws 12" o.c.

Joints staggered 24" each layer and side. Sound tested with 3 1/2" glass fiber friction fit in stud space. **(NLB)**

Thickness: 6 1/8 "
Limiting Height: Refer to Section IV
Approx. Weight: 12 psf
Fire Test: See WP 1548 (WH-495-0238, 1-30-80)
Sound Test: NRCC 818-NV, 2-3-81

2 A101 WALL TYPE 1 (PROVIDE 6" STUD AT '1A')
SCALE: 1/4"=1'-0"

STRIEGEL AGACKI STUDIO
1430 UNDERWOOD
WAUWATOSA, WI 53213
TEL 414.793.3586

Owner:
North 7200, LLC
PO BOX 510932
MILWAUKEE, WI 53203

DATE	NO.	REVISION
04-10-25		PROGRESS SET

project name

TENANT IMPROVEMENT

7200 W. NORTH AVENUE
WAUWATOSA, WI 53213

ISSUED FOR REVIEW
NOT FOR CONSTRUCTION

SCALE:
COMPUTER FILE:
DRAWN BY:
PLOT DATE:
JOB NUMBER:
TITLE: FIRST FLOOR PLAN PLAN

SHEET NUMBER
A101

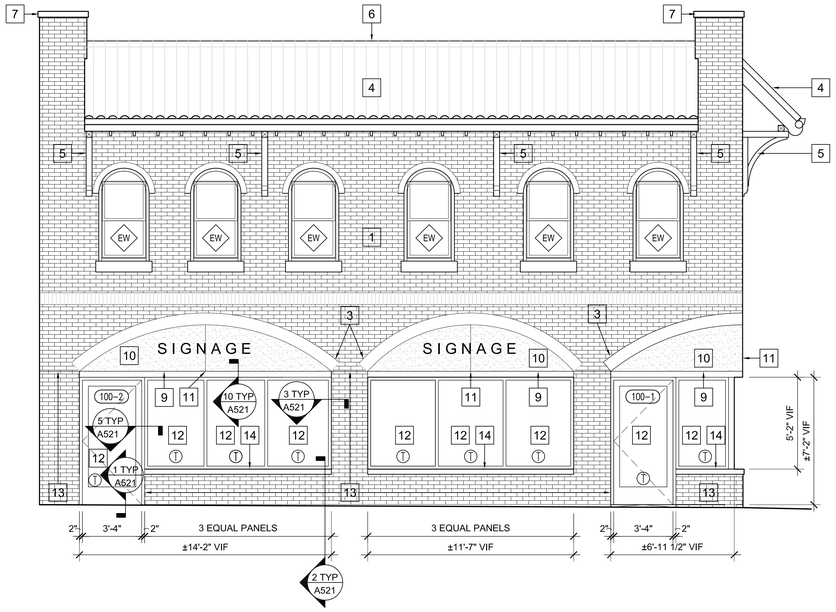

SOUTH ELEVATION

1/4" = 1'-0"

2

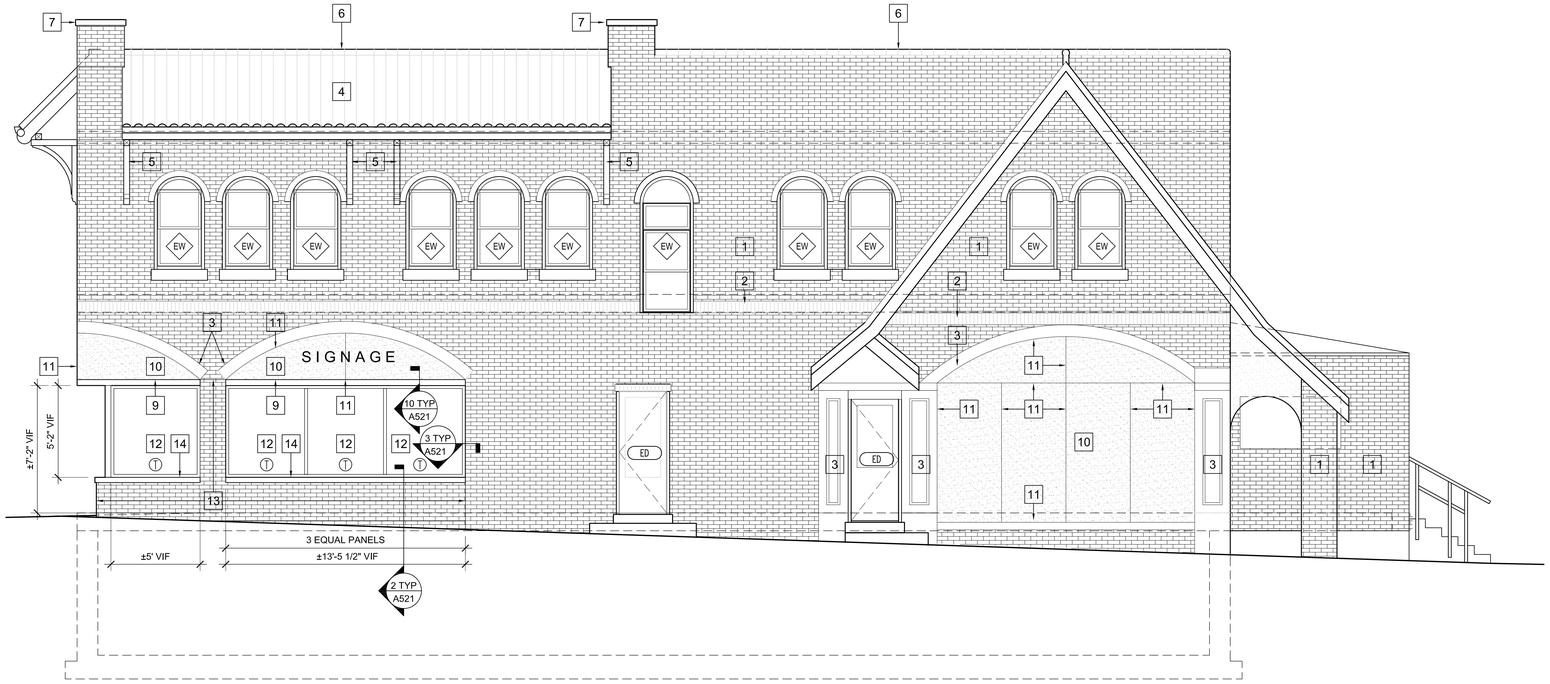

EAST ELEVATION

1/4" = 1'-0"

1

GENERAL NOTES

1. PRIOR TO PENETRATION OF ANY EXTERIOR WALL SURFACE THE LOCATION OF THE PENETRATION MUST BE COORDINATED AND APPROVED BY THE ARCHITECT. FAILURE TO OBTAIN PERMISSION MAY RESULT IN RELOCATION OF THE INSTALLED ITEM AND REPAIR OF THE AFFECTED SURFACES AT NO COST TO THE OWNER.
2. NOTE ONE ABOVE APPLIES TO ALL PENETRATIONS INCLUDING BUT NOT LIMITED TO ROOF SCUPPERS, UTILITY CONNECTIONS, VENTS, AIR INTAKES, ETC.
3. ALL JOINTS IN EXTERIOR MATERIALS ARE AN INDICATION OF DESIGN INTENT ONLY. ALL JOINTS TO FOLLOW MANUFACTURERS RECOMMENDATIONS OR GOOD PRACTICE FOR INSTALLATION AND REQUIRED JOINT LOCATIONS. NOTIFY ARCHITECT OF ANY DEVIATION FROM JOINT PATTERN PRIOR TO EXECUTION.
4. REFER TO A300 SHEETS FOR WINDOWS AND DOORS AND ASSOCIATED NOTES.

ELEVATION KEY NOTES

1 EXISTING BRICK MASONRY
2 EXISTING BRICK SOLIDER COURSE
3 EXISTING CAST TRIM
4 EXISTING CLAY TILE ROOF
5 EXISTING WOOD BRACKET
6 EXISTING CLAY COPING
7 EXISTING STONE COPING
8 NEW 1x4 ENGINEERED COMPOSITE TRIM, PAINTED
9 NEW 1x6 ENGINEERED COMPOSITE TRIM, PAINTED
10 NEW SMOOTH FINISH FIBER CEMENT SIDING-1 ON COR-A-VENT SHIM SYSTEM, PAINTED
11 NEW FIBER CEMENT SIDING ALUMINUM REVEAL TRIM SYSTEM
12 NEW ALUMINUM STOREFRONT SYSTEM, PAINTED
13 NEW BRICK MASONRY TO MATCH EXISTING MASONRY AND GROUT
14 NEW CAST SILL
ED EXISTING DOOR TO REMAIN
EW EXISTING WINDOW TO REMAIN

EXTERIOR DOOR / WINDOW NOTES

1. ALL WINDOWS ARE TO MEET ALL CODE REQUIREMENTS - GC TO COORDINATE WITH SUPPLIER.
2. T = TEMPERED SAFETY GLASS PER CODE.
3. SWINGING DOORS WITH FULL LITES TO HAVE MINIMUM 10" HIGH BOTTOM RAIL PER ICC/ANSI A117.1 - 2009, 404.2.9.
4. REFER TO ELEVATION DRAWINGS FOR WINDOW OPERATION OR GROUPINGS.
5. GC TO VERIFY ALL WINDOW AND DOOR ROUGH OPENINGS IN FIELD PRIOR TO ORDERING WINDOW UNITS.
6. ALL GLAZING TO COMPLY WITH IBC 2015, CHAPTER 24 FOR SAFETY GLAZING MATERIALS, REQUIRED APPLICABLE TESTING AND LOCATIONS, GC AND SUPPLER TO VERIFY.
7. CHANGES IN LEVEL GREATER THAN 1/4" IN HEIGHT AND NOT MORE THAN 1/2" MAXIMUM IN HEIGHT SHALL BE BEVELED WITH A SLOPE NOT STEEPER THAN 1:2, VERIFY WITH DOOR LOCATIONS AND COORDINATE WITH MANUFACTURER / SUPPLIER.
8. WINDOW AND DOOR SIZES ARE APPROXIMATE UNIT DIMENSIONS, NOT ROUGH OPENINGS. GC TO COORDINATE APPROVED WINDOW AND DOOR MANUFACTURER'S REQUIRED ADDITIONAL SHIM SPACE GIVEN POTENTIAL BUILDING SHRINKAGE AT WOOD FLOORS AND RESULTANT REQUIRED WINDOW AND DOOR ROUGH OPENINGS AND REPORT TO ARCH.
9. EXTERIOR DOOR CLEAR OPENING WITH DOOR SWUNG OPEN TO 90 DEGREES OR FULLY SLID OPEN TO BE MINIMUM 32" CLEAR WIDTH, GC AND SUPPLIER TO VERIFY AND REPORT TO ARCH.
10. REFER TO A3 SHEETS FOR EXTERIOR CLADDING MATERIALS ADJACENT TO WINDOW UNITS AND NUMBERED DETAILS.
11. 'EWR' WINDOWS ARE UNITS TO BE REPLACED IN PLACE; VERIFY THESE UNIT SIZES IN FIELD.

STRIEGEL AGACKI STUDIO
1430 UNDERWOOD
WAUWATOSA, WI 53213
TEL 414.793.3586

Owner:
North 7200, LLC
PO BOX 510932
MILWAUKEE, WI 53203

DATE	NO.	REVISION
04-10-25		PROGRESS SET

project name

TENANT IMPROVEMENT

7200 W. NORTH AVENUE
WAUWATOSA, WI 53213

ISSUED FOR REVIEW
NOT FOR CONSTRUCTION

SCALE:
COMPUTER FILE:
DRAWN BY:
PLOT DATE:
JOB NUMBER:
TITLE:
EXTERIOR ELEVATIONS

SHEET NUMBER
A301

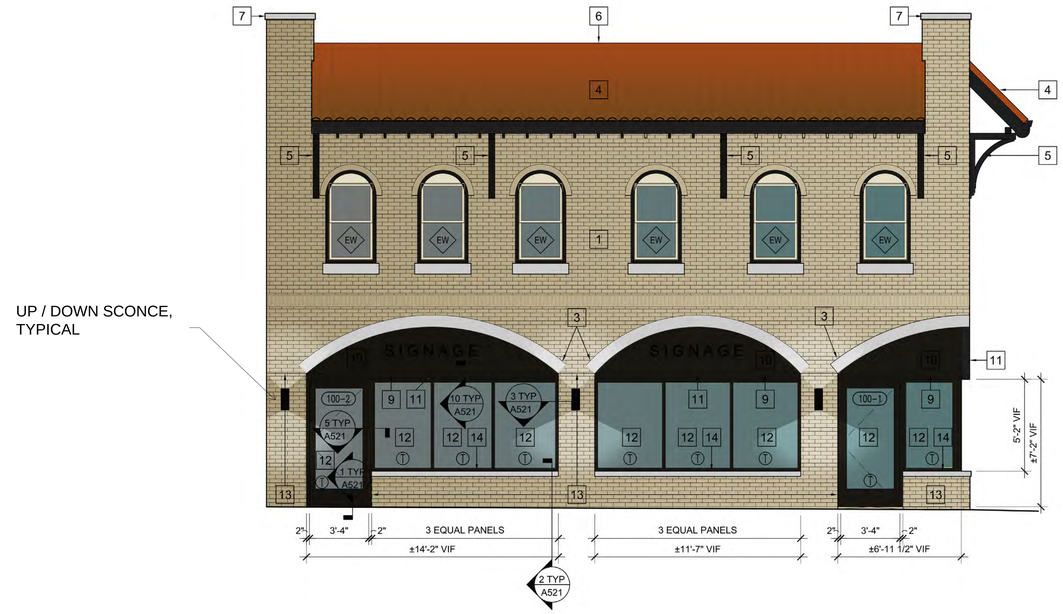

SOUTH ELEVATION

1/4" = 1'-0"

2

EAST ELEVATION

1/4" = 1'-0"

1

GENERAL NOTES

1. PRIOR TO PENETRATION OF ANY EXTERIOR WALL SURFACE THE LOCATION OF THE PENETRATION MUST BE COORDINATED AND APPROVED BY THE ARCHITECT. FAILURE TO OBTAIN PERMISSION MAY RESULT IN RELOCATION OF THE INSTALLED ITEM AND REPAIR OF THE AFFECTED SURFACES AT NO COST TO THE OWNER.
2. NOTE ONE ABOVE APPLIES TO ALL PENETRATIONS INCLUDING BUT NOT LIMITED TO ROOF SCUPPERS, UTILITY CONNECTIONS, VENTS, AIR INTAKES, ETC.
3. ALL JOINTS IN EXTERIOR MATERIALS ARE AN INDICATION OF DESIGN INTENT ONLY. ALL JOINTS TO FOLLOW MANUFACTURERS RECOMMENDATIONS OR GOOD PRACTICE FOR INSTALLATION AND REQUIRED JOINT LOCATIONS. NOTIFY ARCHITECT OF ANY DEVIATION FROM JOINT PATTERN PRIOR TO EXECUTION.
4. REFER TO A300 SHEETS FOR WINDOWS AND DOORS AND ASSOCIATED NOTES.

ELEVATION KEY NOTES

1 EXISTING BRICK MASONRY
2 EXISTING BRICK SOLIDER COURSE
3 EXISTING CAST TRIM
4 EXISTING CLAY TILE ROOF
5 EXISTING WOOD BRACKET
6 EXISTING CLAY COPING
7 EXISTING STONE COPING
8 NEW 1x4 ENGINEERED COMPOSITE TRIM, PAINTED
9 NEW 1x6 ENGINEERED COMPOSITE TRIM, PAINTED
10 NEW SMOOTH FINISH FIBER CEMENT SIDING-1 ON COR-A-VENT SHIM SYSTEM, PAINTED
11 NEW FIBER CEMENT SIDING ALUMINUM REVEAL TRIM SYSTEM
12 NEW ALUMINUM STOREFRONT SYSTEM, PAINTED
13 NEW BRICK MASONRY TO MATCH EXISTING MASONRY AND GROUT
14 NEW CAST SILL
ED EXISTING DOOR TO REMAIN
EW EXISTING WINDOW TO REMAIN

EXTERIOR DOOR / WINDOW NOTES

1. ALL WINDOWS ARE TO MEET ALL CODE REQUIREMENTS - GC TO COORDINATE WITH SUPPLIER.
2. T = TEMPERED SAFETY GLASS PER CODE.
3. SWINGING DOORS WITH FULL LITES TO HAVE MINIMUM 10" HIGH BOTTOM RAIL PER ICC/ANSI A117.1 - 2009, 404.2.9.
4. REFER TO ELEVATION DRAWINGS FOR WINDOW OPERATION OR GROUPINGS.
5. GC TO VERIFY ALL WINDOW AND DOOR ROUGH OPENINGS IN FIELD PRIOR TO ORDERING WINDOW UNITS.
6. ALL GLAZING TO COMPLY WITH IBC 2015, CHAPTER 24 FOR SAFETY GLAZING MATERIALS, REQUIRED APPLICABLE TESTING AND LOCATIONS, GC AND SUPPLER TO VERIFY.
7. CHANGES IN LEVEL GREATER THAN 1/4" IN HEIGHT AND NOT MORE THAN 1/2" MAXIMUM IN HEIGHT SHALL BE BEVELED WITH A SLOPE NOT STEEPER THAN 1:2, VERIFY WITH DOOR LOCATIONS AND COORDINATE WITH MANUFACTURER / SUPPLIER.
8. WINDOW AND DOOR SIZES ARE APPROXIMATE UNIT DIMENSIONS, NOT ROUGH OPENINGS. GC TO COORDINATE APPROVED WINDOW AND DOOR MANUFACTURER'S REQUIRED ADDITIONAL SHIM SPACE GIVEN POTENTIAL BUILDING SHRINKAGE AT WOOD FLOORS AND RESULTANT REQUIRED WINDOW AND DOOR ROUGH OPENINGS AND REPORT TO ARCH.
9. EXTERIOR DOOR CLEAR OPENING WITH DOOR SWUNG OPEN TO 90 DEGREES OR FULLY SLID OPEN TO BE MINIMUM 32" CLEAR WIDTH, GC AND SUPPLIER TO VERIFY AND REPORT TO ARCH.
10. REFER TO A3 SHEETS FOR EXTERIOR CLADDING MATERIALS ADJACENT TO WINDOW UNITS AND NUMBERED DETAILS.
11. 'EWR' WINDOWS ARE UNITS TO BE REPLACED IN PLACE; VERIFY THESE UNIT SIZES IN FIELD.

STRIEGEL AGACKI STUDIO
1430 UNDERWOOD
WAUWATOSA, WI 53213
TEL 414.793.3586

Owner:
North 7200, LLC
PO BOX 510932
MILWAUKEE, WI 53203

DATE	NO.	REVISION
04-10-25		PROGRESS SET

project name

TENANT IMPROVEMENT

7200 W. NORTH AVENUE
WAUWATOSA, WI 53213

ISSUED FOR REVIEW
NOT FOR CONSTRUCTION

SCALE:
COMPUTER FILE:
DRAWN BY:
PLOT DATE:
JOB NUMBER:
TITLE:
EXTERIOR ELEVATIONS

SHEET NUMBER
A301

JamesHardie

Our Products | Project Resources | Design Guidance | About James Hardie

Individual colors may vary depending on display settings. Samples only available in Select Cedarmill® texture. Please check with your contractor or local dealer for availability in your area.

Statement Collection®

Primed for Paint

Did not find the color you're looking for? Click here.

Select color

Green | Brown | Gray | Purple | Blue | Neutral

White | **Black** | Yellow | Red | Orange

Find colors by name

Search by color name. E.g. "Linden Green

Preferred color

Made specifically for you, products may incur additional cost and production time.

Shou Sugi Ban

Add sample to cart | $10

Visualize with Hardie™ Designer, powered by Hover®

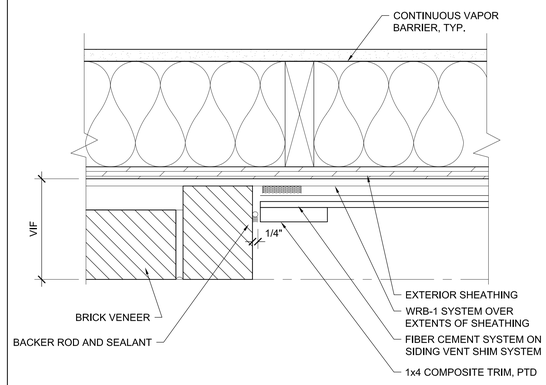

9 PLAN DETAIL - BRICK TO FIBER CEMENT

-

Scale: 3"=1'-0"

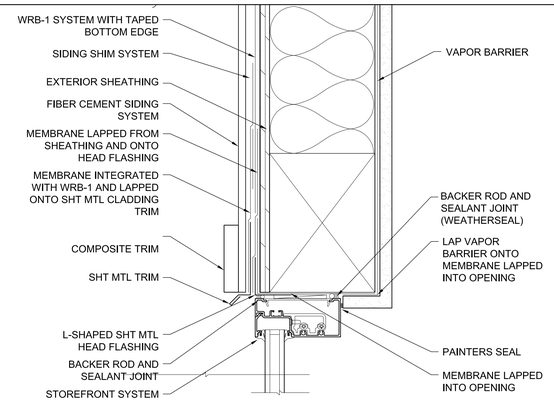

10 STOREFRONT FIBER CEMENT SIDING HEAD

-

Scale: 3"=1'-0"

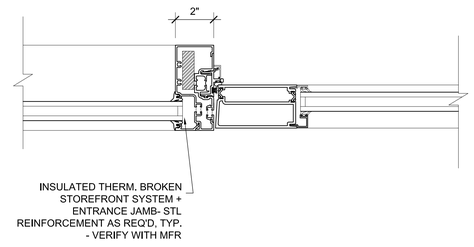

5 STOREFRONT JAMB DETAIL AT DOOR

-

Scale: 3"=1'-0"

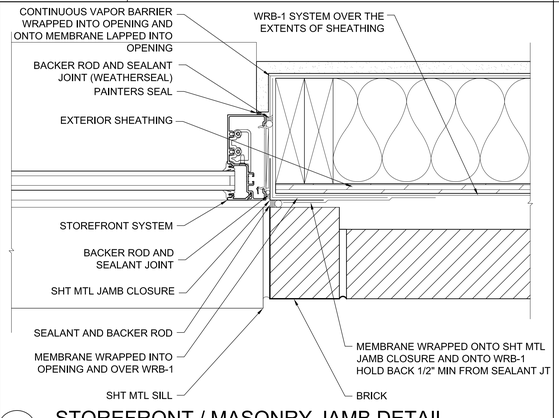

3 STOREFRONT / MASONRY JAMB DETAIL

-

Scale: 3"=1'-0"

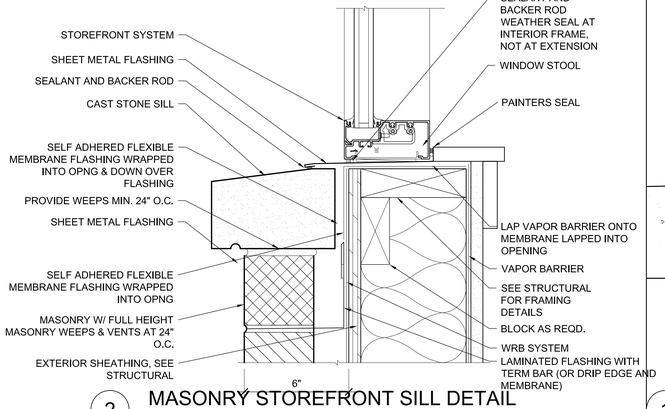

2 MASONRY STOREFRONT SILL DETAIL

-

Scale: 3"=1'-0"

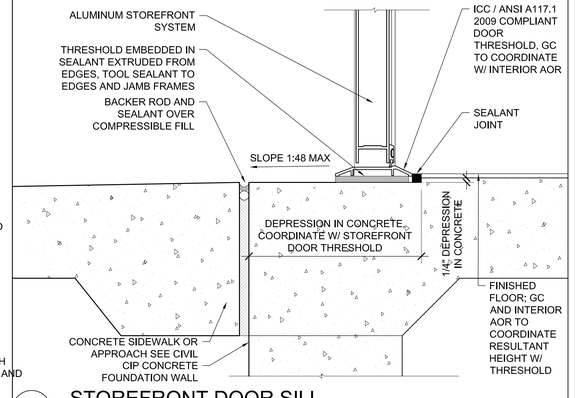

1 STOREFRONT DOOR SILL

-

Scale: NTS

STRIEGEL AGACKI STUDIO
1430 UNDERWOOD
WAUWATOSA, WI 53213
TEL 414.793.3586

Owner:

North 7200, LLC
PO BOX 510932
MILWAUKEE, WI 53203

DATE	NO.	REVISION
04-10-25		PROGRESS SET

project name

TENANT IMPROVEMENT

7200 W. NORTH AVENUE
WAUWATOSA, WI 53213

ISSUED FOR REVIEW
NOT FOR CONSTRUCTION

SCALE:
COMPUTER FILE:

DRAWN BY:
PLOT DATE:
JOB NUMBER:
TITLE:

EXTERIOR DETAILS

SHEET NUMBER

A521