CITY OF WAUWATOSA
CONTRACT 23-07
N 115th STREET IMPROVEMENTS

PROJECT #1023

CITY OF WAUWATOSA
ENGINEERING SERVICES DIVISION

PLAN INDEX

SHEET NO.		FILE NO.
00	COVER SHEET	--
TRAFFIC CONTROL		
T01-T02	TRAFFIC CONTROL PLAN	--
SANITARY SEWER		
A01-A03	SANITARY SEWER IMPROVEMENTS	16-994
WATER MAIN		
B01-B02	WATER MAIN IMPROVEMENTS	30-811
STORM SEWER		
C01	STORM SEWER OVERALL	41-996
C02-C11	STORM SEWER RELAY	41-996
C12-C17	STORM SEWER DETAILS	41-996
ROADWAY		
D01	GENERAL NOTES	15-1075
D02	PAVEMENT OVERVIEW	15-1075
D03-D04	TYPICAL SECTIONS	15-1075
D05-D09	CONSTRUCTION DETAILS	15-1075
D10-D15	PLAN AND PROFILE	15-1075
D16-D20	PAVEMENT GRADES	15-1075
D21-D23	INTERSECTION DETAILS	15-1075
D24-D27	CURB RAMP DETAILS	15-1075
D28-D29	PAVEMENT MARKING	15-1075
D30-D36	MISCELLANEOUS QUANTITIES	15-1075
STREET LIGHTING & COMMUNICATIONS		
E01	STREET LIGHTING PROJECT AREA	23-275
E02-E09	STREET LIGHTING REMOVAL PLAN	23-275
E10-E19	PROPOSED STREET LIGHTING PLAN	23-275
E20-E21	STREET LIGHTING DETAILS	23-275
SIGNAGE AND PAVEMENT MARKINGS		
S01	GENERAL NOTES AND LEGEND	--
S02-S06	SIGNAGE AND PAVEMENT MARKING PLAN	--

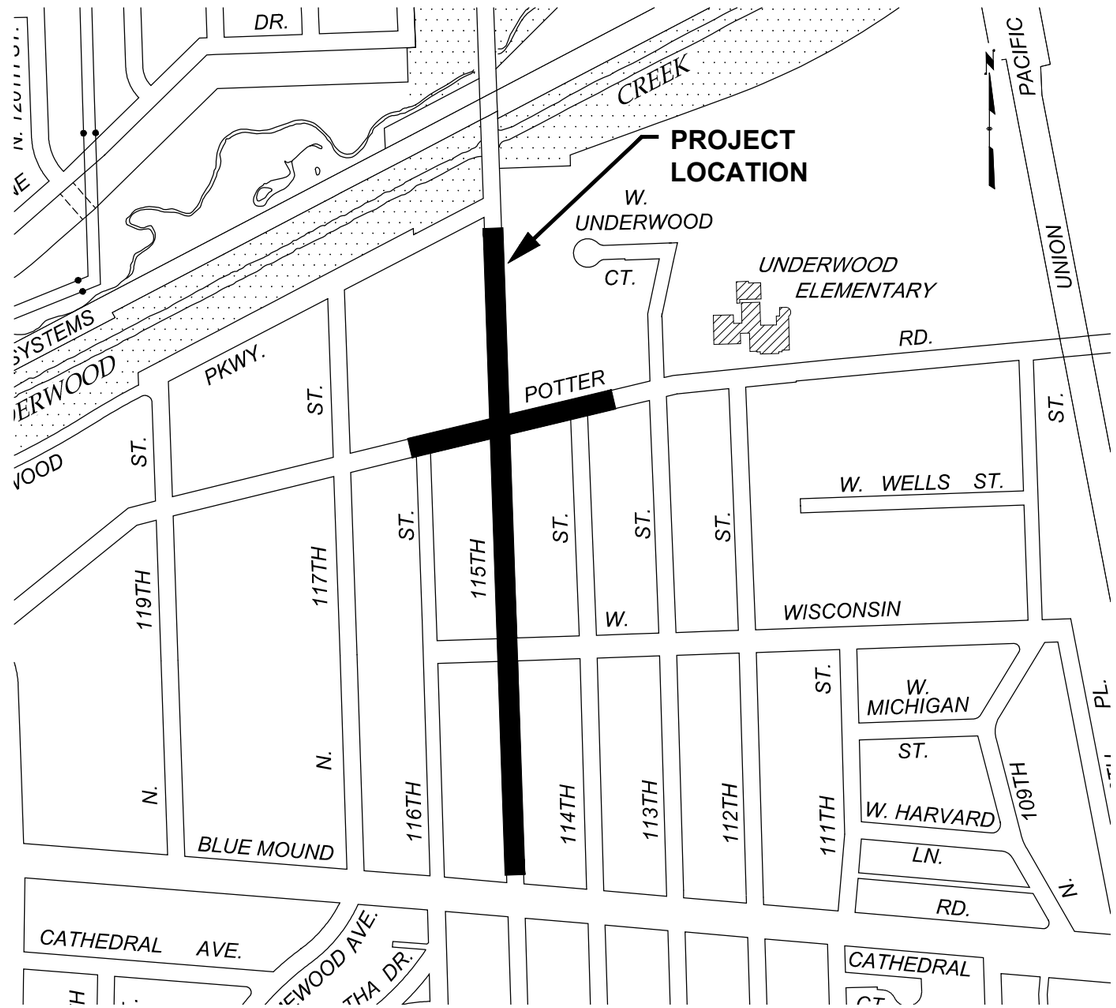

CONSTRUCTION COORDINATION:

NICK DEMING, PE
CONSTRUCTION MANAGER
(414) 479-3541
ndeming@wauwatosa.net

ROADWAY COORDINATION:

JENNIFER SCHROEDER, PE
SENIOR CIVIL ENGINEER
(414) 479-3544
jschroeder@wauwatosa.net

UTILITY COORDINATION:

MAGGIE ANDERSON, PE
SENIOR CIVIL ENGINEER
(414) 479-3444
manderson@wauwatosa.net

APPROVED BY THE BOARD OF PUBLIC WORKS OF THE CITY OF WAUWATOSA, WISCONSIN BY RESOLUTION ADOPTED:

DATE — CITY CLERK

SUBMITTED FOR APPROVAL:

April 17th, 2023
DATE — CITY ENGINEER REG. PROF. ENGR.

CITY OF WAUWATOSA
ENGINEERING SERVICES DIVISION

N 115th STREET IMPROVEMENTS

W BLUE MOUND RD TO W UNDERWOOD PKWY

SCALE: AS NOTED | SHEETS:

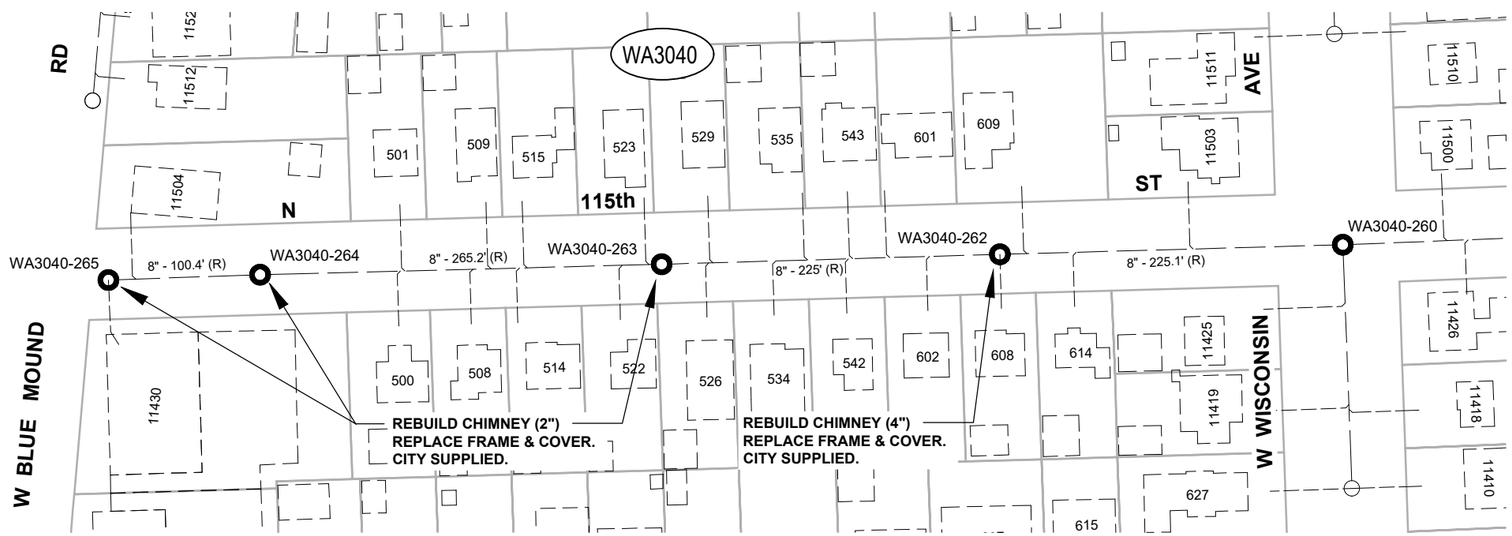

LEGEND

MH REHAB WORK REQUIRED

LATERAL CONNECTION AT MANHOLE.
LINE TO LENGTH SHOWN ON PLANS

FACTORY WYE CONNECTION.
LINE TO LENGTH SHOWN ON PLANS

8" - 110.8' (R) EX SANITARY SEWER - RELINED

DATE	DESCRIPTION

CITY OF WAUWATOSA
ENGINEERING SERVICES DIVISION

N 115th ST IMPROVEMENTS

N 115TH ST

FROM: W BLUE MOUND RD
BETWEEN: W WISCONSIN AVE

CONTRACT:	23-07
FILE NO:	16-994
DRAWN BY:	WAT
CHECKED BY:	MMM
SCALE:	1" = 100'

A01

FILE NAME : S:\DEPARTMENT FOLDERS\ENGINEERING\ACAD_PROJECTS\23-07 115TH STREET\DESIGN\N 115TH ST SANITARY.DWG PLOT DATE : 4/10/2023 3:44 PM PLOT BY : WTREU

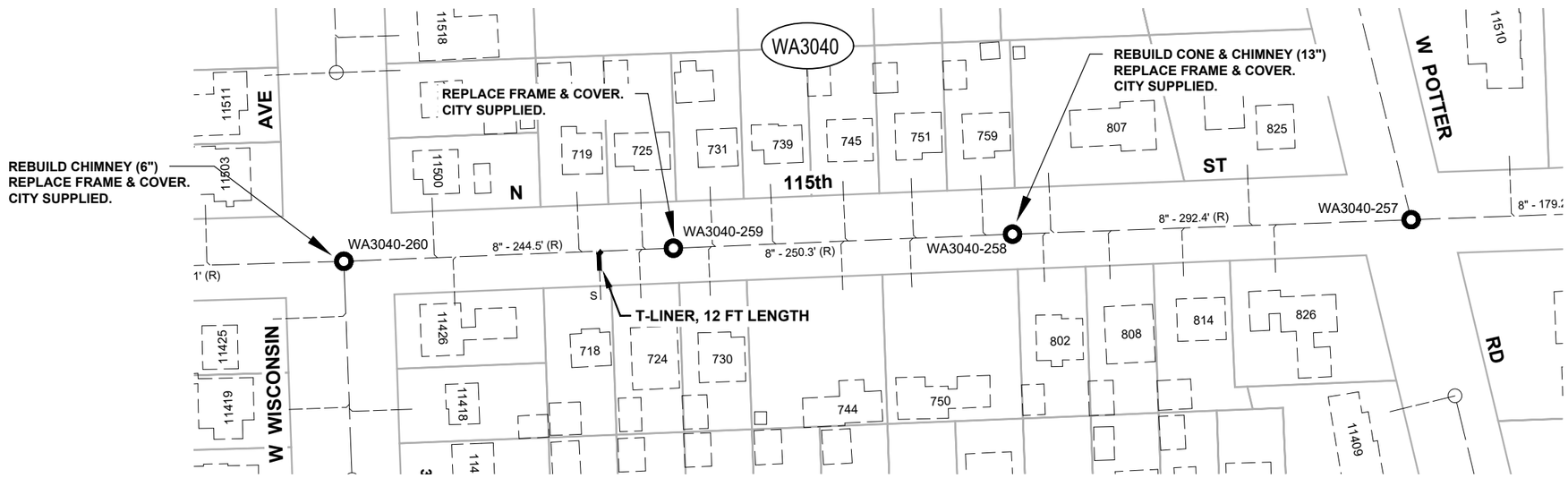

LEGEND

	MH REHAB WORK REQUIRED
S	LATERAL CONNECTION AT MANHOLE. LINE TO LENGTH SHOWN ON PLANS
S	FACTORY WYE CONNECTION. LINE TO LENGTH SHOWN ON PLANS
8" - 110.8' (R)	EX SANITARY SEWER - RELINED

DATE	DESCRIPTION

CITY OF WAUWATOSA
ENGINEERING SERVICES DIVISION

N 115th ST IMPROVEMENTS

N 115TH ST

FROM: W WISCONSIN AVE
BETWEEN: W POTTER RD

CONTRACT: 23-07
FILE NO: 16-994
DRAWN BY: WAT
CHECKED BY: MMM
SCALE: 1" = 100'

A02

FILE NAME : S:\DEPARTMENT FOLDERS\ENGINEERING\ACAD_PROJECTS\23-07 115TH STREET\DESIGN\N 115TH ST SANITARY.DWG PLOT DATE : 4/10/2023 3:45 PM PLOT BY : WTREU

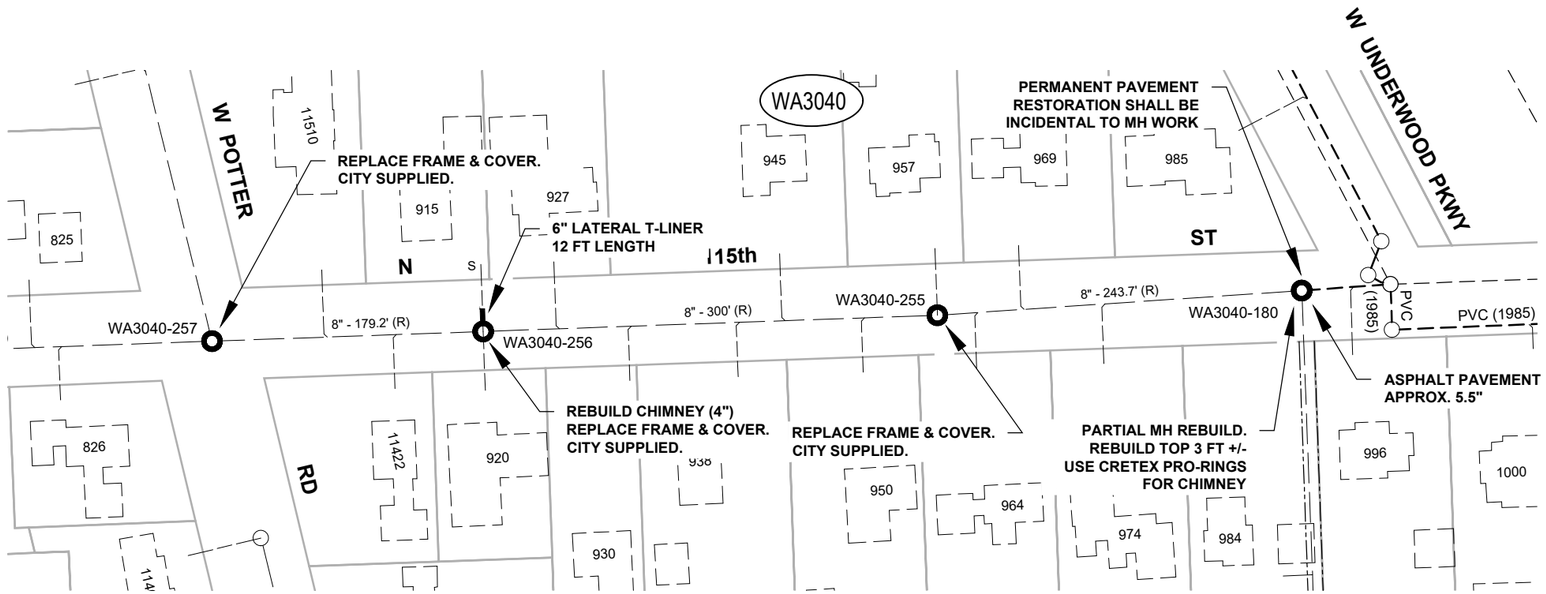

LEGEND

MH REHAB WORK REQUIRED

LATERAL CONNECTION AT MANHOLE.
LINE TO LENGTH SHOWN ON PLANS

FACTORY WYE CONNECTION.
LINE TO LENGTH SHOWN ON PLANS

8" - 110.8' (R) EX SANITARY SEWER - RELINED

DATE	DESCRIPTION

CITY OF WAUWATOSA
ENGINEERING SERVICES DIVISION

N 115th ST IMPROVEMENTS

N 115TH ST

FROM: W POTTER RD
BETWEEN: W UNDERWOOD PKWY

CONTRACT: 23-07
FILE NO: 16-994
DRAWN BY: WAT
CHECKED BY: MMM
SCALE: 1" = 100'

A03

FILE NAME : S:\DEPARTMENT FOLDERS\ENGINEERING\ACAD_PROJECTS\23-07 115TH STREET\DESIGN\N 115TH ST SANITARY.DWG PLOT DATE : 4/10/2023 3:45 PM PLOT BY : WTREU

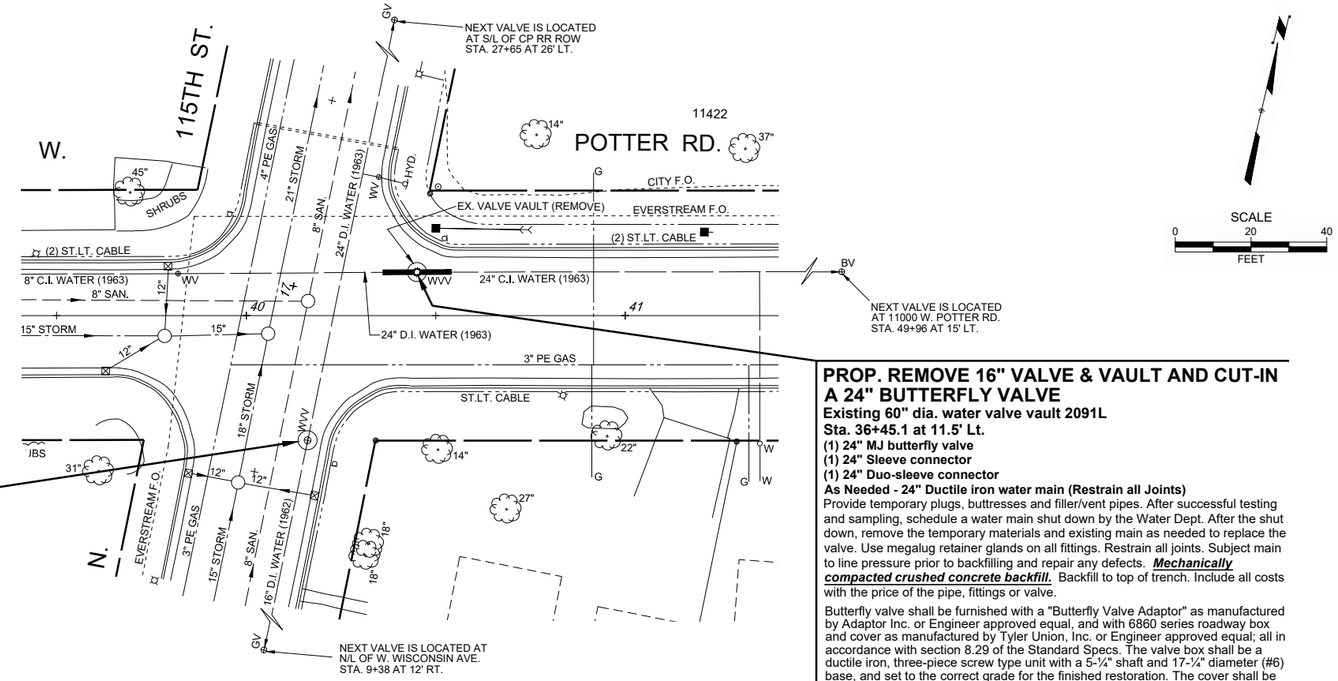

PROP. ABANDON WATER VALVE VAULT
Existing 60" dia. water valve vault 2089L
Sta. 16+61 at 12.0' Rt.
See detail on sheet B02

PROP. REMOVE 16" VALVE & VAULT AND CUT-IN A 24" BUTTERFLY VALVE
Existing 60" dia. water valve vault 2091L
Sta. 36+45.1 at 11.5' Lt.
(1) 24" MJ butterfly valve
(1) 24" Sleeve connector
(1) 24" Duo-sleeve connector
As Needed - 24" Ductile iron water main (Restrain all Joints)
Provide temporary plugs, buttresses and filler/vent pipes. After successful testing and sampling, schedule a water main shut down by the Water Dept. After the shut down, remove the temporary materials and existing main as needed to replace the valve. Use megalug retainer glands on all fittings. Restrain all joints. Subject main to line pressure prior to backfilling and repair any defects. ***Mechanically compacted crushed concrete backfill.*** Backfill to top of trench. Include all costs with the price of the pipe, fittings or valve.

Butterfly valve shall be furnished with a "Butterfly Valve Adaptor" as manufactured by Adaptor Inc. or Engineer approved equal, and with 6860 series roadway box and cover as manufactured by Tyler Union, Inc. or Engineer approved equal; all in accordance with section 8.29 of the Standard Specs. The valve box shall be a ductile iron, three-piece screw type unit with a 5-¼" shaft and 17-¼" diameter (#6) base, and set to the correct grade for the finished restoration. The cover shall be marked "WATER".

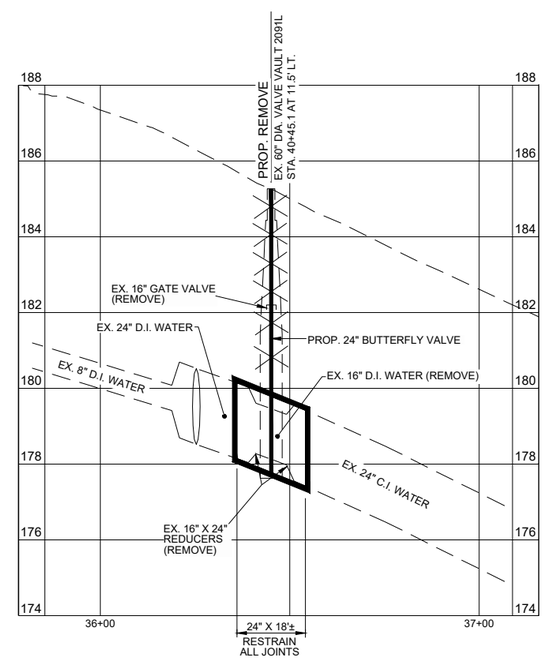

PROP. EROSION CONTROL INLET BASKETS
Install in all the inlets and catch basins directly down-surface of all open-cut work prior to starting work or where required by the City Engineer. Inlets and catch basins have curb boxes. Inlet control must be removed when work is completed. Cost to be incidental to contract.

Underground utilities have been shown to a reasonable degree of accuracy using diggers hotline field locates and record drawings. However, the city does not guarantee their exact size, location or depth or that of others not shown. The contractor shall verify the existence of these utilities and those not shown. Costs for locating and delay shall be incidental to the contract.

DATE	DESCRIPTION

CITY OF WAUWATOSA
ENGINEERING SERVICES DIVISION

WATER VALVE REPLACEMENT & VALVE VAULT ABANDONMENT

INTERSECTION OF W. POTTER RD. & N. 115TH ST.

CONTRACT:	23-07
FILE NO:	30-811
DRAWN BY:	C.R.
CHECKED BY:	M.M.
SCALE:	AS SHOWN

B01

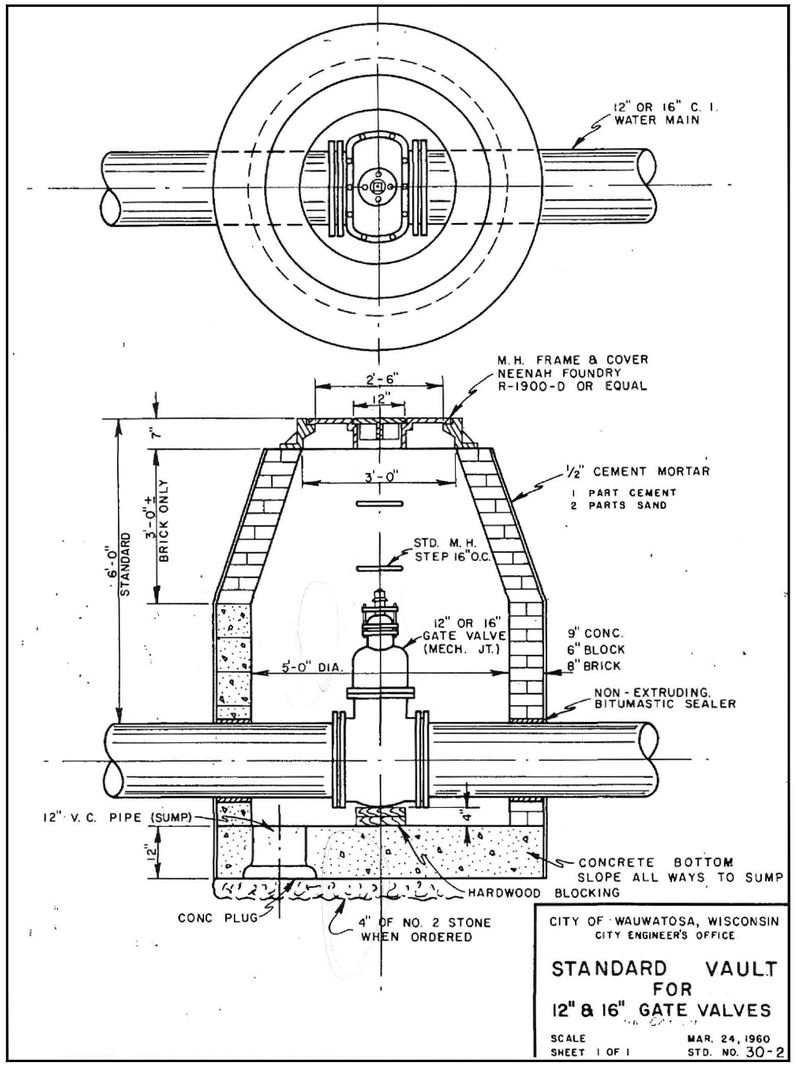

EXISTING VALVE VAULT
N.T.S.

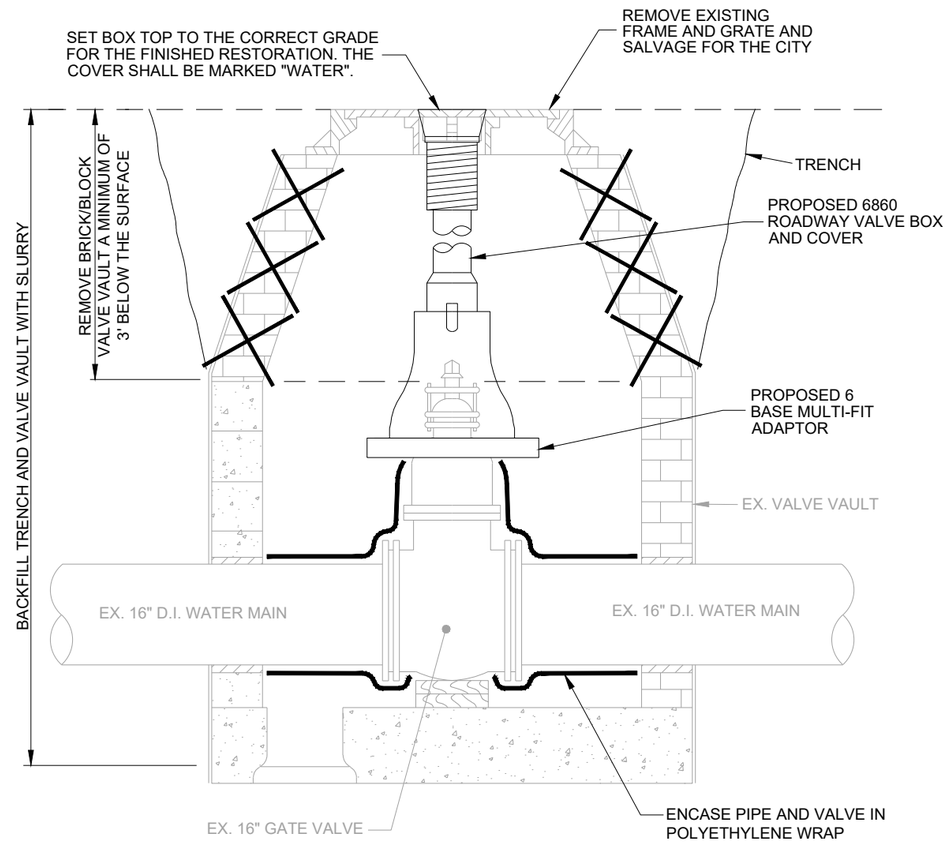

PROPOSED VALVE VAULT ABANDONMENT
1" = 2'

DATE	DESCRIPTION

CITY OF WAUWATOSA
ENGINEERING SERVICES DIVISION

WATER VALVE REPLACEMENT & VALVE VAULT ABANDONMENT

INTERSECTION OF W. POTTER RD. & N. 115TH ST.

CONTRACT:	23-07
FILE NO.:	30-811
DRAWN BY:	C.R.
CHECKED BY:	M.M.
SCALE:	AS SHOWN

B02

STORM SEWER NOTES

1. CONTRACTOR SHALL EXPOSE EXISTING STORM SEWER AT ALL LOCATIONS PRIOR TO START OF CONSTRUCTION TO VERIFY EXACT LOCATION AND INVERT OF EXISTING SEWER. ANY DISCREPANCIES SHALL BE REPORTED TO ENGINEER TO ALLOW DESIGN MODIFICATIONS AS REQUIRED.
2. EXISTING SANITARY SEWER AND WATER MAIN CROSSINGS HAVE BEEN SHOWN IN THE PROFILE ALONG THE STORM SEWER BASED ON BEST AVAILABLE RECORDS. ELECTRIC, TELEPHONE, GAS, STREET LIGHTING, WATER AND SANITARY SERVICES ARE SHOWN IN PLAN AND PROFILE VIEW BASED ON BEST AVAILABLE RECORDS. CONTRACTOR SHALL LOCATE SERVICES IN THE FIELD AND CROSSING OF THESE SERVICES ARE INCIDENTAL TO UNIT BID PRICE FOR STORM SEWER.
3. STORM LATERAL LOCATIONS ARE APPROXIMATE ONLY. FINAL LOCATION SHALL BE DETERMINED IN FIELD DURING CONSTRUCTION. ALL STORM LATERALS SHALL HAVE 3' TO 4' OF COVER AT 2' BEHIND BACK OF CURB. ALL STORM LATERALS SHALL HAVE A MINIMUM OF $\frac{1}{4}$ INCH PER FOOT POSITIVE SLOPE.
4. THE CONTRACTOR IS TO EXERCISE GREAT CARE WHEN WORKING IN THE VICINITY OF EXISTING WATER MAIN. ALL COST OF REPAIRING DAMAGED WATER MAIN SHALL BE INCLUDED IN THE UNIT BID PRICE OF STORM SEWER ITEMS.
5. ALL STORM SEWER ELEVATIONS ON PLANS ARE INVERT ELEVATIONS. ALL CATCH BASINS/INLETS OFFSETS ARE TO FACE OF CURB.
6. CONSTRUCT ALL SEWER IN ACCORDANCE WITH THE STANDARD SPECIFICATIONS FOR SEWER AND WATER CONSTRUCTION IN WISCONSIN, LATEST EDITION- INCLUDING ADDENDUMS.
7. ALL RIM ELEVATIONS ARE APPROXIMATE, AND SHALL BE VERIFIED IN THE FIELD DURING CONSTRUCTION.
8. ALL INLET AND CATCH BASIN RIM ELEVATIONS ARE FROM CURB FLANGE LINE.
9. BYPASS PUMPING SHALL BE INCIDENTAL TO STORM SEWER CONSTRUCTION.
10. CONTRACTOR SHALL ABANDON ALL STORM SEWER IN LINE WITH PROPOSED SEWER BY REMOVING ALL EXISTING PIPE AND MANHOLES.
11. CONTRACTOR SHALL RECONNECT ALL EXISTING LIVE STORM SEWER LINES OR LATERALS TO THE PROPOSED STORM SEWER SYSTEM.
12. GRANULAR BACKFILL IN ACCORDANCE WITH CITY SPECIFICATIONS SHALL BE USED UNLESS OTHERWISE NOTED. THE USE OF SLURRY BACKFILL AS NOTED ON PLANS IS INCIDENTAL TO THE COST OF THE STORM SEWER.
13. NEW MANHOLE CASTINGS SHALL BE CITY SUPPLIED NEENAH R-1661-B FRAME WITH R-2471-D, IN WHICH THE CONTRACTOR SHALL PICK UP FROM THE DEPARTMENT OF PUBLIC WORKS, 11100 W WALNUT RD., WAUWATOSA, WI 53226. CONTRACTOR SHALL SCHEDULE PICKUP WITH MINIMUM 48 HOURS NOTICE.
14. NEW CATCH BASIN AND INLET FRAMES, GRATES AND CURB BOXES SHALL BE CITY SUPPLIED WHICH THE CONTRACTOR SHALL PICK UP FROM THE DEPARTMENT OF PUBLIC WORKS, 11100 W WALNUT RD., WAUWATOSA, WI 53226. CONTRACTOR SHALL SCHEDULE PICKUP WITH MINIMUM 48 HOURS NOTICE.

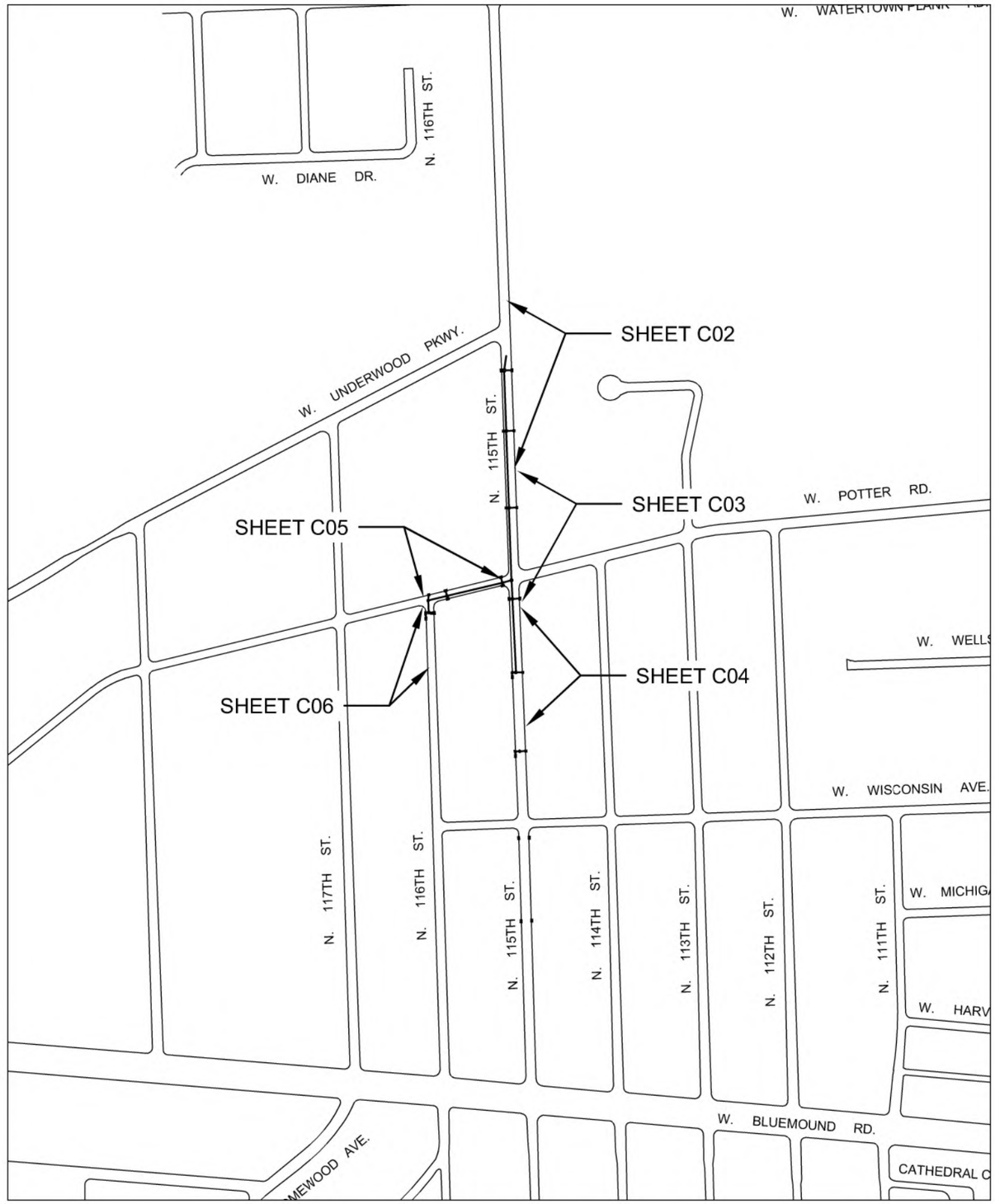

DATE	DESCRIPTION

CITY OF WAUWATOSA
ENGINEERING SERVICES DIVISION

STORM SEWER OVERALL

N. 115TH ST.

CONTRACT:	23-07
FILE NO:	41-996
DRAWN BY:	RPC
CHECKED BY:	MJA
SCALE:	N.T.S.

C01

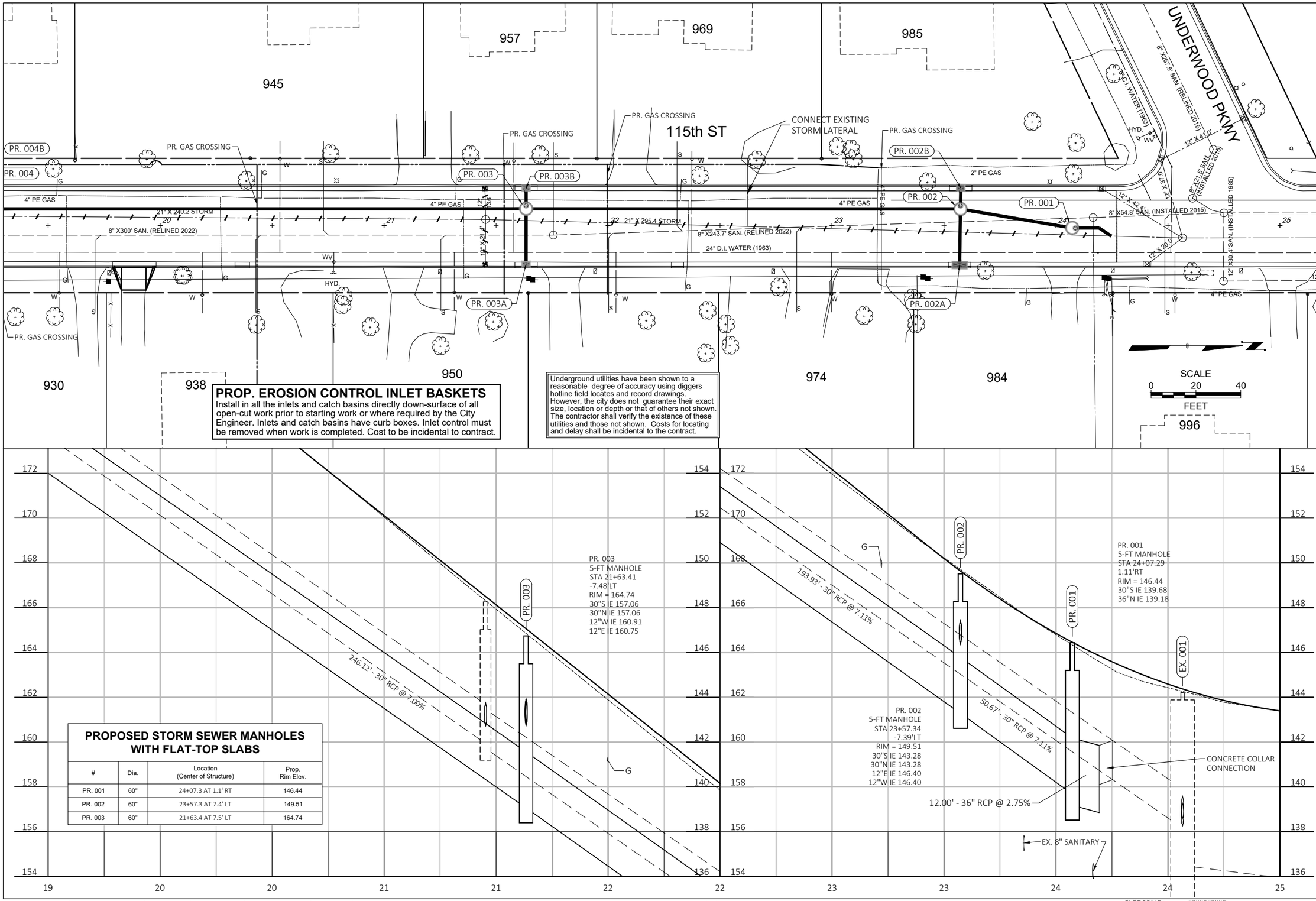

PROPOSED STORM SEWER MANHOLES WITH FLAT-TOP SLABS

#	Dia.	Location (Center of Structure)	Prop. Rim Elev.
PR. 001	60"	24+07.3 AT 1.1' RT	146.44
PR. 002	60"	23+57.3 AT 7.4' LT	149.51
PR. 003	60"	21+63.4 AT 7.5' LT	164.74

DESCRIPTION

DATE

CITY OF WAUWATOSA
ENGINEERING SERVICES DIVISION

STORM SEWER RELAY

N. 115TH ST.

TO: W. UNDERWOOD PKWY.

FROM: W. BLUE MOUND RD.

CONTRACT: 23-07
FILE NO: 41-996
DRAWN BY: RPC
CHECKED BY: MJA
SCALE: AS SHOWN

C02

FILE NAME : S:\DEPARTMENT FOLDERS\ENGINEERING\ACAD_PROJECTS\23-07 115TH STREET\SHEETSPLAN\115TH STORM PROFILE.DWG
LAYOUT NAME - C02

PLOT DATE : 4/12/2023 12:59 PM

PLOT BY : RYAN CHRISTENSEN

PLOT SCALE : ##########

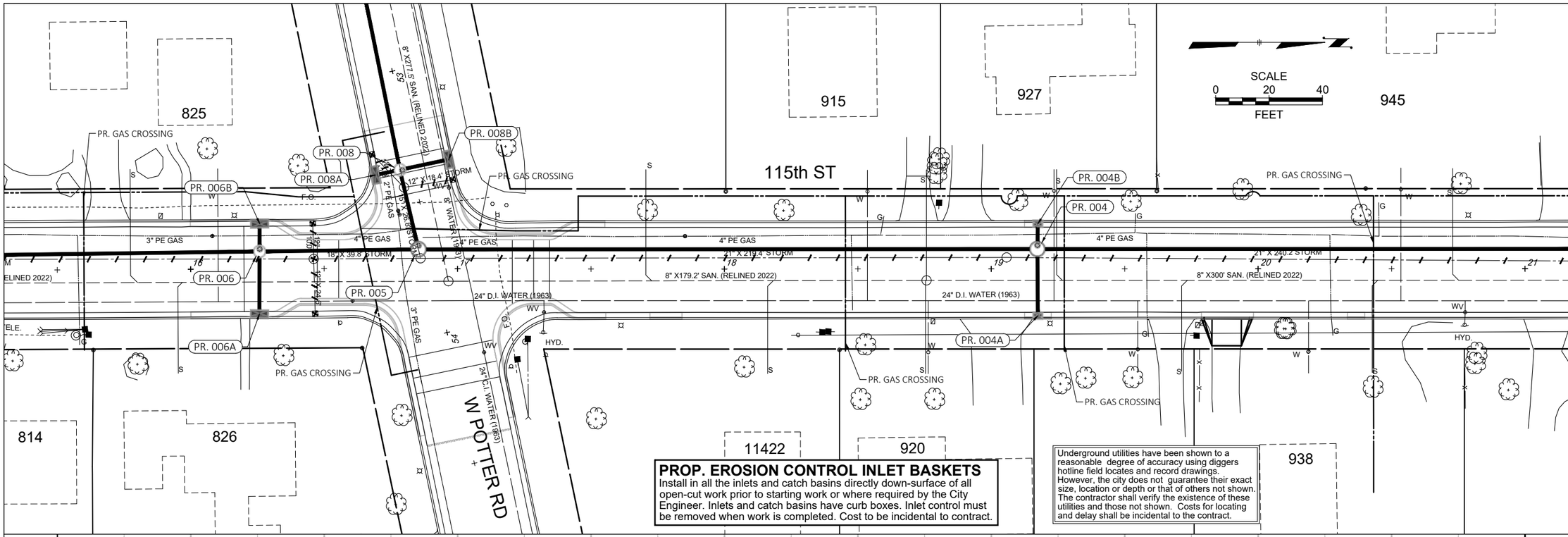

PROP. EROSION CONTROL INLET BASKETS
Install in all the inlets and catch basins directly down-surface of all open-cut work prior to starting work or where required by the City Engineer. Inlets and catch basins have curb boxes. Inlet control must be removed when work is completed. Cost to be incidental to contract.

Underground utilities have been shown to a reasonable degree of accuracy using diggers hotline field locates and record drawings. However, the city does not guarantee their exact size, location or depth or that of others not shown. The contractor shall verify the existence of these utilities and those not shown. Costs for locating and delay shall be incidental to the contract.

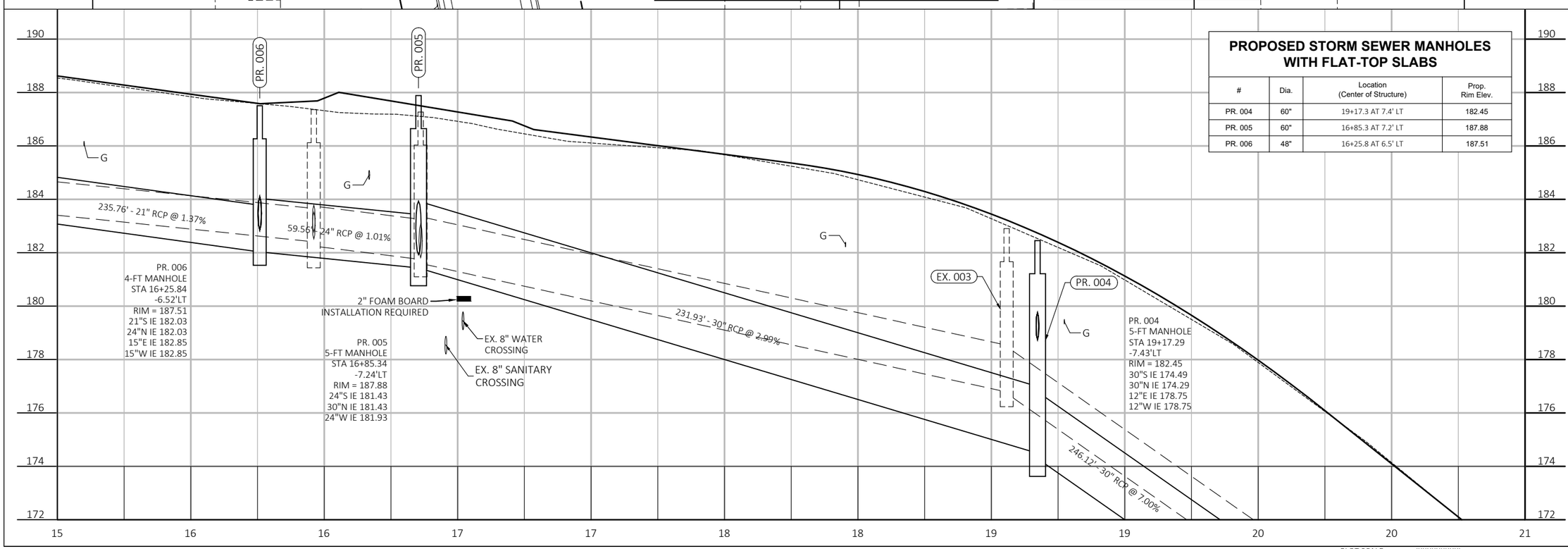

PROPOSED STORM SEWER MANHOLES WITH FLAT-TOP SLABS

#	Dia.	Location (Center of Structure)	Prop. Rim Elev.
PR. 004	60"	19+17.3 AT 7.4' LT	182.45
PR. 005	60"	16+85.3 AT 7.2' LT	187.88
PR. 006	48"	16+25.8 AT 6.5' LT	187.51

DESCRIPTION
DATE

CITY OF WAUWATOSA
ENGINEERING SERVICES DIVISION

STORM SEWER RELAY
N. 115TH ST.
FROM: W. BLUE MOUND RD.
TO: W. UNDERWOOD PKWY.

CONTRACT: 23-07
FILE NO: 41-996
DRAWN BY: RPC
CHECKED BY: MJA
SCALE: AS SHOWN

C03

FILE NAME : S:\DEPARTMENT FOLDERS\ENGINEERING\ACAD_PROJECTS\23-07 115TH STREET\SHEETSPLAN\115TH STORM PROFILE.DWG
LAYOUT NAME - C03
PLOT DATE : 4/12/2023 12:59 PM
PLOT BY : RYAN CHRISTENSEN
PLOT SCALE : ##########

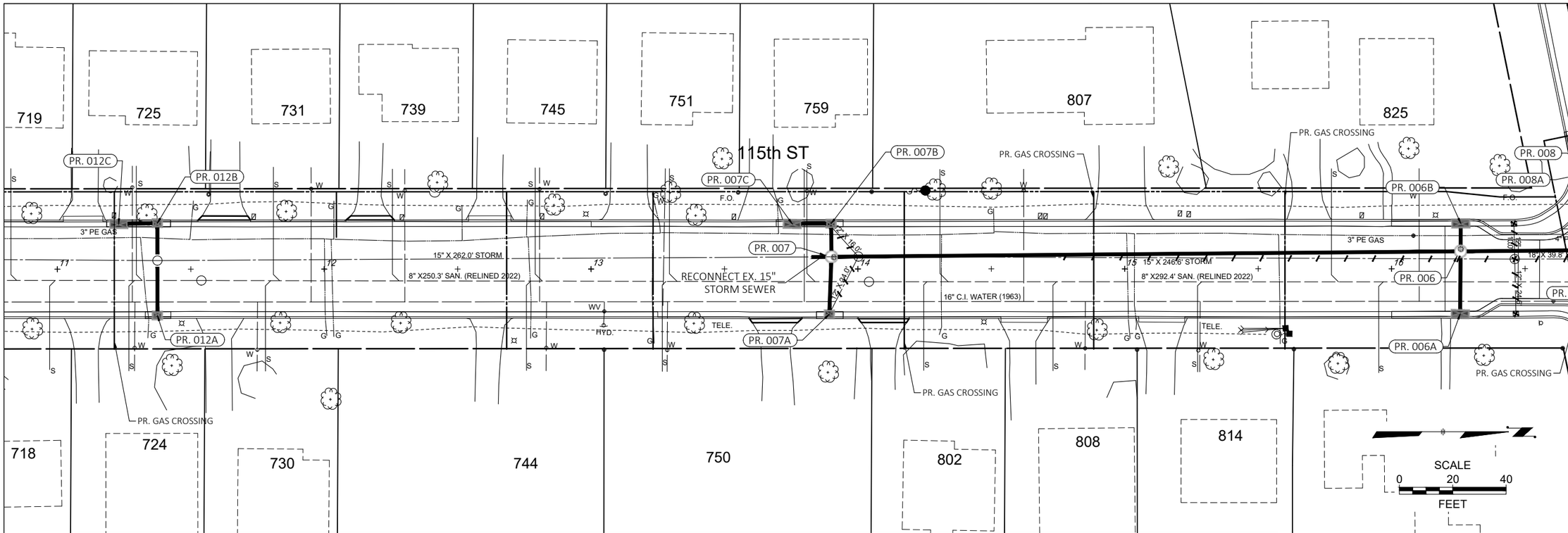

PROP. EROSION CONTROL INLET BASKETS

Install in all the inlets and catch basins directly down-surface of all open-cut work prior to starting work or where required by the City Engineer. Inlets and catch basins have curb boxes. Inlet control must be removed when work is completed. Cost to be incidental to contract.

Underground utilities have been shown to a reasonable degree of accuracy using diggers hotline field locates and record drawings. However, the city does not guarantee their exact size, location or depth or that of others not shown. The contractor shall verify the existence of these utilities and those not shown. Costs for locating and delay shall be incidental to the contract.

PROPOSED STORM SEWER MANHOLES WITH FLAT-TOP SLABS

#	Dia.	Location (Center of Structure)	Prop. Rim Elev.
EX. 007	48"	11+37.5 AT 3.2' LT	203.97
PR. 006	48"	16+25.8 AT 6.5' LT	187.51
PR. 007	48"	13+90.1 AT 4.6' LT	191.61

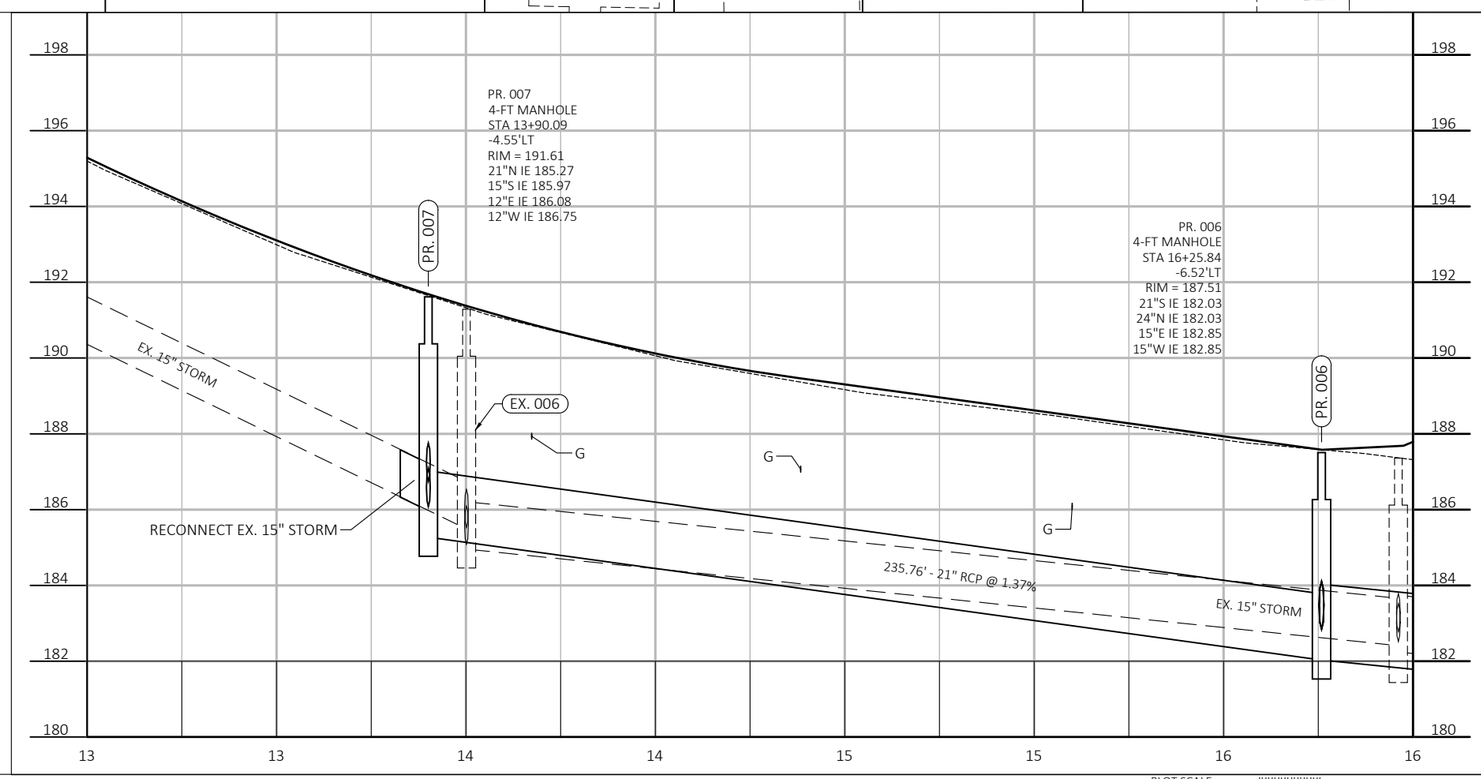

DESCRIPTION

DATE

CITY OF WAUWATOSA
ENGINEERING SERVICES DIVISION

STORM SEWER RELAY

N. 115TH ST.

FROM: W. BLUE MOUND RD.

TO: W. UNDERWOOD PKWY.

CONTRACT:	23-07
FILE NO:	41-996
DRAWN BY:	RPC
CHECKED BY:	MJA
SCALE:	AS SHOWN

C04

FILE NAME : S:\DEPARTMENT FOLDERS\ENGINEERING\ACAD_PROJECTS\23-07 115TH STREET\SHEETSPLAN\115TH STORM PROFILE.DWG
LAYOUT NAME - C04

PLOT DATE : 4/12/2023 12:59 PM

PLOT BY : RYAN CHRISTENSEN

PLOT SCALE : ##########

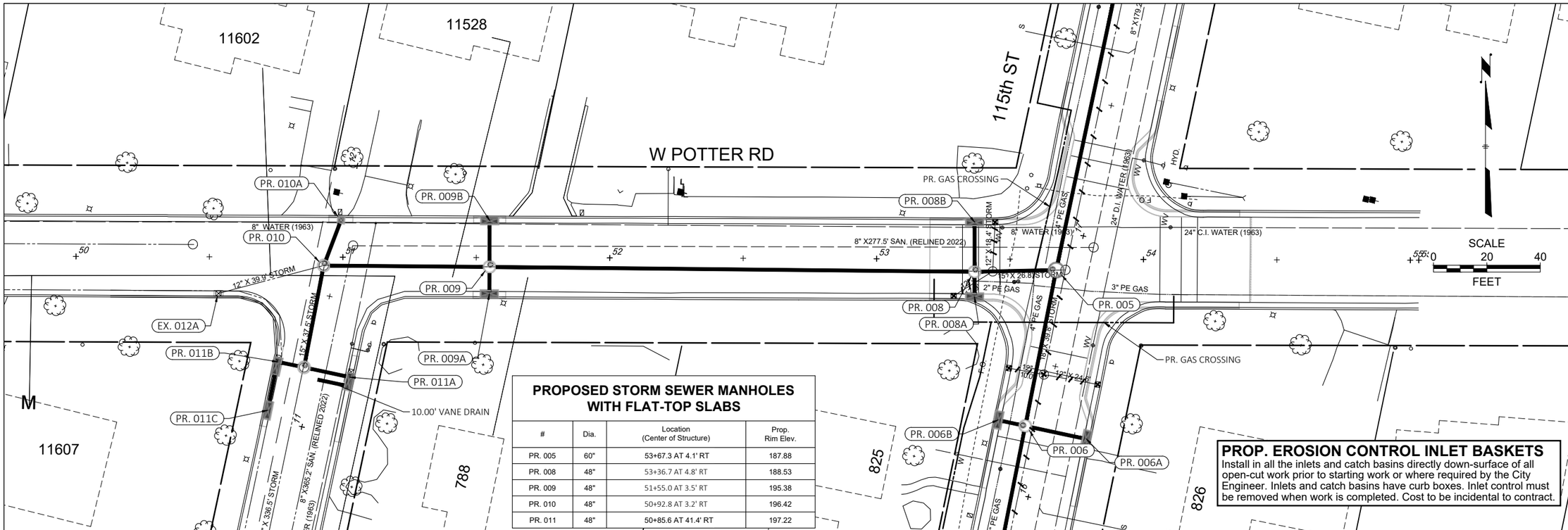

PROPOSED STORM SEWER MANHOLES WITH FLAT-TOP SLABS

#	Dia.	Location (Center of Structure)	Prop. Rim Elev.
PR. 005	60"	53+67.3 AT 4.1' RT	187.88
PR. 008	48"	53+36.7 AT 4.8' RT	188.53
PR. 009	48"	51+55.0 AT 3.5' RT	195.38
PR. 010	48"	50+92.8 AT 3.2' RT	196.42
PR. 011	48"	50+85.6 AT 41.4' RT	197.22

PROP. EROSION CONTROL INLET BASKETS

Install in all the inlets and catch basins directly down-surface of all open-cut work prior to starting work or where required by the City Engineer. Inlets and catch basins have curb boxes. Inlet control must be removed when work is completed. Cost to be incidental to contract.

Underground utilities have been shown to a reasonable degree of accuracy using diggers hotline field locates and record drawings. However, the city does not guarantee their exact size, location or depth or that of others not shown. The contractor shall verify the existence of these utilities and those not shown. Costs for locating and delay shall be incidental to the contract.

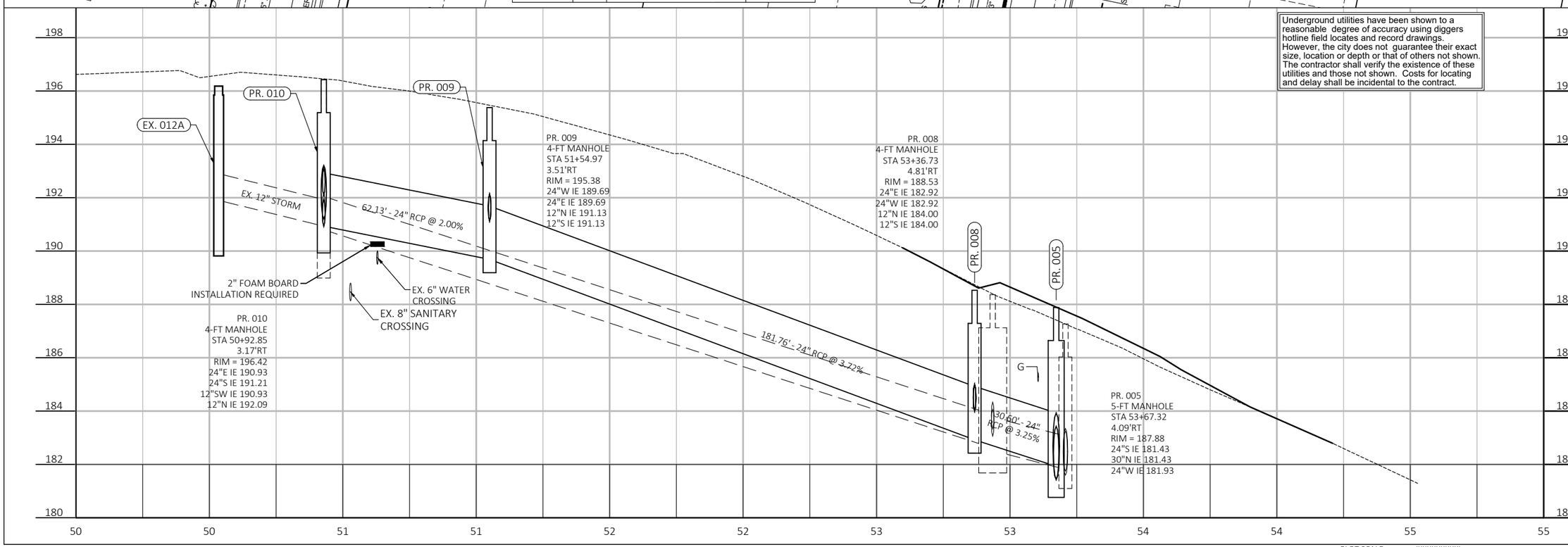

DESCRIPTION

DATE

CITY OF WAUWATOSA
ENGINEERING SERVICES DIVISION

STORM SEWER RELAY

W. POTTER RD.

TO: N. 115TH ST.

FROM: N. 116TH ST.

CONTRACT: 23-07
FILE NO: 41-996
DRAWN BY: RPC
CHECKED BY: MJA
SCALE: AS SHOWN

C05

FILE NAME : S:\DEPARTMENT FOLDERS\ENGINEERING\ACAD_PROJECTS\23-07 115TH STREET\SHEETSPLAN\115TH STORM PROFILE.DWG
LAYOUT NAME - C05

PLOT DATE : 4/12/2023 1:00 PM

PLOT BY : RYAN CHRISTENSEN

PLOT SCALE : ##########

PROP. EROSION CONTROL INLET BASKETS
Install in all the inlets and catch basins directly down-surface of all open-cut work prior to starting work or where required by the City Engineer. Inlets and catch basins have curb boxes. Inlet control must be removed when work is completed. Cost to be incidental to contract.

Underground utilities have been shown to a reasonable degree of accuracy using diggers hotline field locates and record drawings. However, the city does not guarantee their exact size, location or depth or that of others not shown. The contractor shall verify the existence of these utilities and those not shown. Costs for locating and delay shall be incidental to the contract.

PROPOSED RECTANGULAR CATCH BASINS

#	Size	Location (C/L structure)	Location (face of curb)	Prop. Grate Elev. (at gutter)	Prop. Castings	Sump (V.F.)
PR. 009A	30" X 72"	51+54.9 AT 13.7' RT	51+54.9 AT 14.7' RT	195.13	R-3293-2	3.0
PR. 009B	30" X 72"	51+55.0 AT 13.9' LT	51+55.0 AT 14.84' LT	194.93	R-3293-2	0.0
PR. 010A	24" X 24"	11+78.8 AT 1.7' LT	50+99.3 AT 14.85' LT	195.74	R-3210-A	0.0
PR. 011A	30" X 72"	11+21.9 AT 13.8' RT	11+20.2 AT 14.74' RT	196.86	R-3293-2	0.0
PR. 011B	30" X 72"	11+21.9 AT 13.9' LT	11+20.3 AT 14.9' LT	196.51	R-3293-2	3.0
PR. 011C	30" X 72"	11+03.4 AT 13.8' LT	11+03.4 AT 14.85' LT	197.05	R-3293-2	3.0

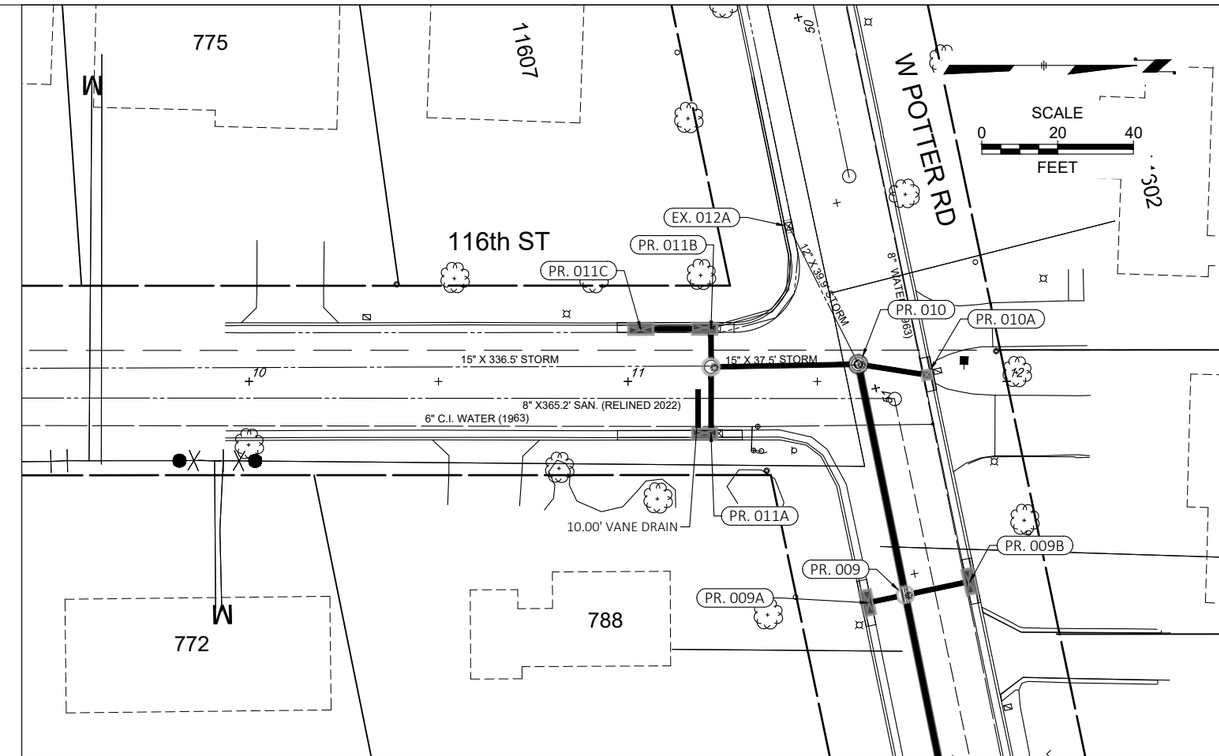

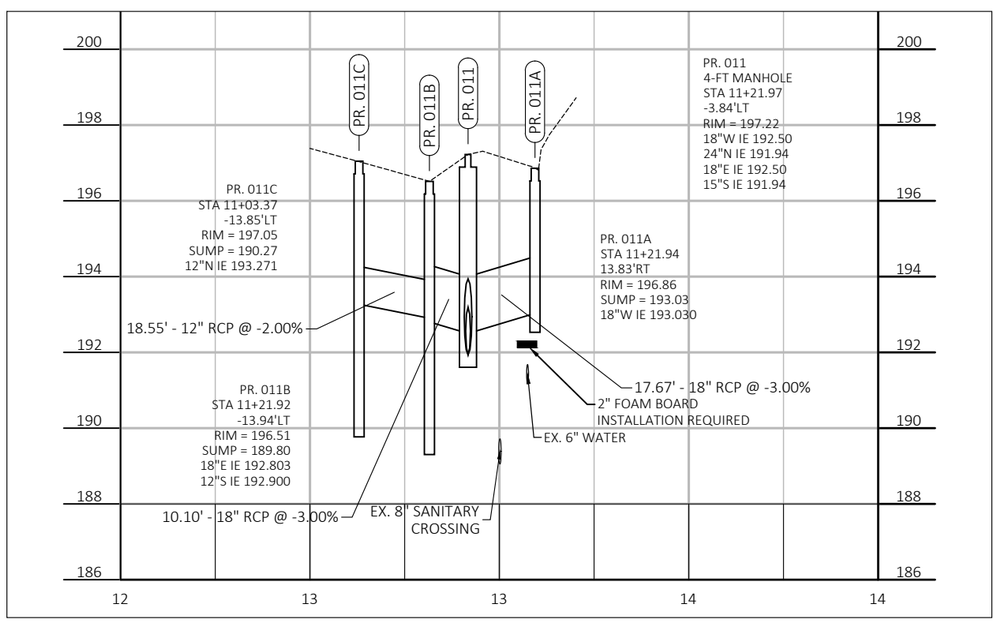

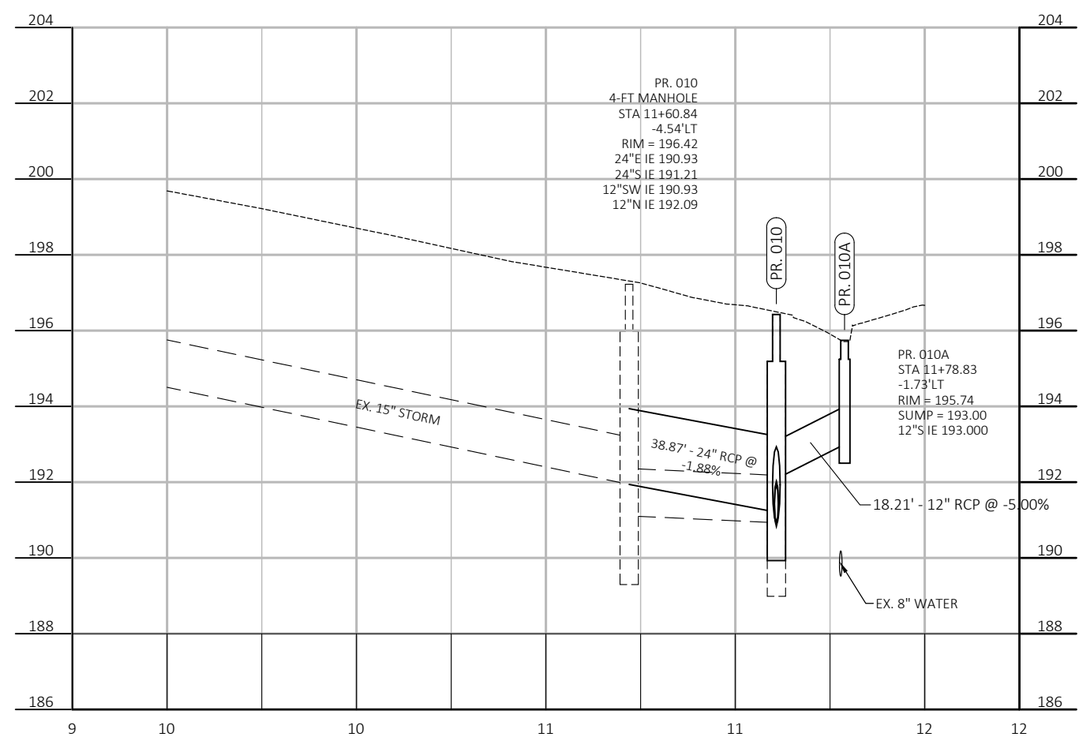

DESCRIPTION
DATE

CITY OF WAUWATOSA
ENGINEERING SERVICES DIVISION

STORM SEWER RELAY
N. 116TH ST.
FROM: W. WISCONSIN AVE.
TO: W. POTTER RD.

CONTRACT: 23-07
FILE NO: 41-996
DRAWN BY: RPC
CHECKED BY: MJA
SCALE: AS SHOWN

C06

FILE NAME : S:\DEPARTMENT FOLDERS\ENGINEERING\ACAD_PROJECTS\23-07 115TH STREET\SHEETSPLAN\115TH STORM PROFILE.DWG
LAYOUT NAME - C06
PLOT DATE : 4/12/2023 1:00 PM
PLOT BY : RYAN CHRISTENSEN
PLOT SCALE : ##########

PROPOSED RECTANGULAR CATCH BASINS

#	Size	Location (C/L structure)	Location (face of curb)	Prop. Grate Elev. (at gutter)	Prop. Castings	Sump (V.F.)
PR. 002A	30" X 72"	23+56.9 AT 17.7' RT	23+56.9 AT 18.2' RT	149.36	R-3293-2	0.0
PR. 002B	30" X 36"	23+57.5 AT 16.8' LT	23+57.5 AT 17.4' LT	149.25	R-3246-AL	3.0
PR. 003A	30" X 36"	21+63.4 AT 17.3' RT	21+63.4 AT 18.2' RT	164.42	R-3246-AL	0.0
PR. 003B	30" X 36"	21+63.4 AT 16.5' LT	21+63.4 AT 17.5' LT	164.37	R-3246-AL	3.0

PROP. EROSION CONTROL INLET BASKETS
Install in all the inlets and catch basins directly down-surface of all open-cut work prior to starting work or where required by the City Engineer. Inlets and catch basins have curb boxes. Inlet control must be removed when work is completed. Cost to be incidental to contract.

Underground utilities have been shown to a reasonable degree of accuracy using diggers hotline field locates and record drawings. However, the city does not guarantee their exact size, location or depth or that of others not shown. The contractor shall verify the existence of these utilities and those not shown. Costs for locating and delay shall be incidental to the contract.

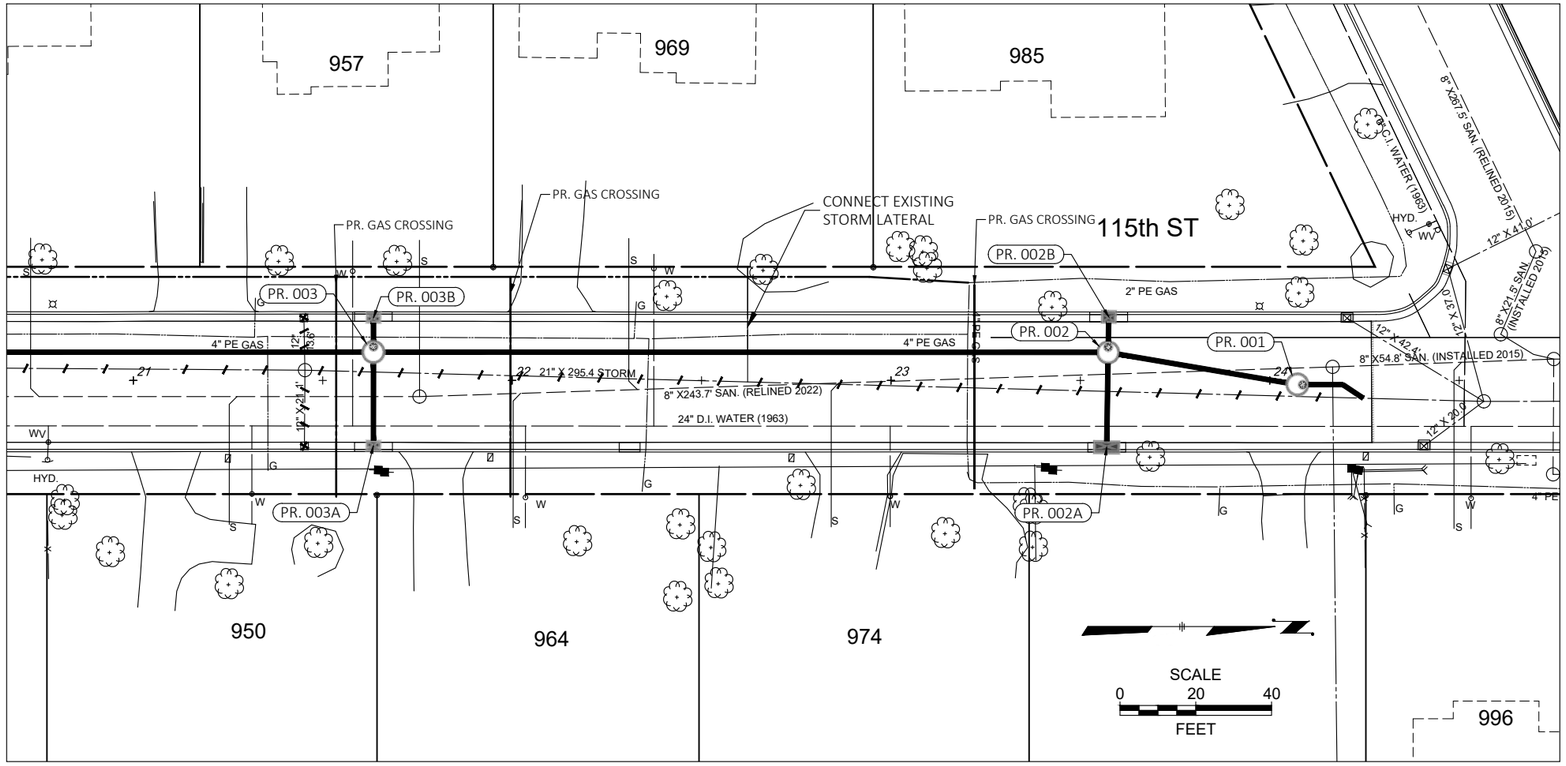

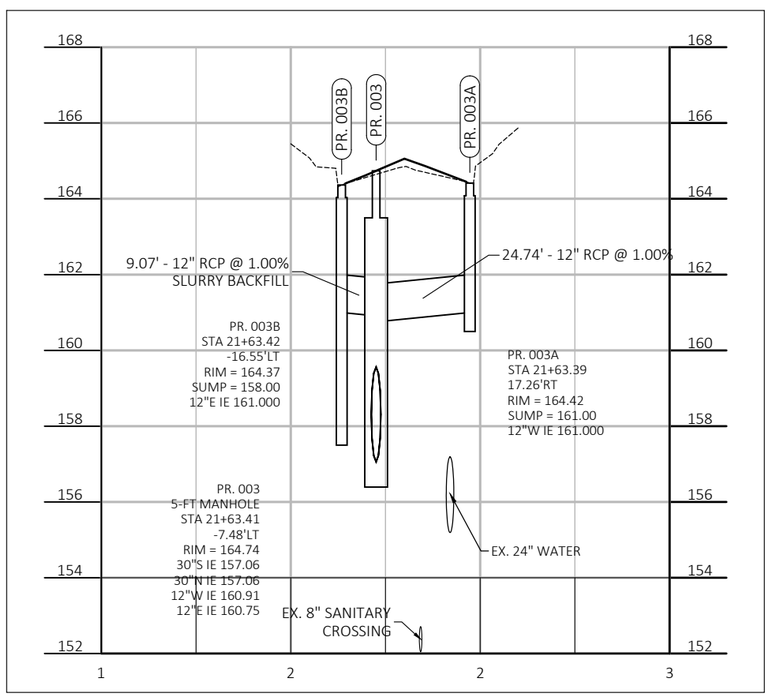

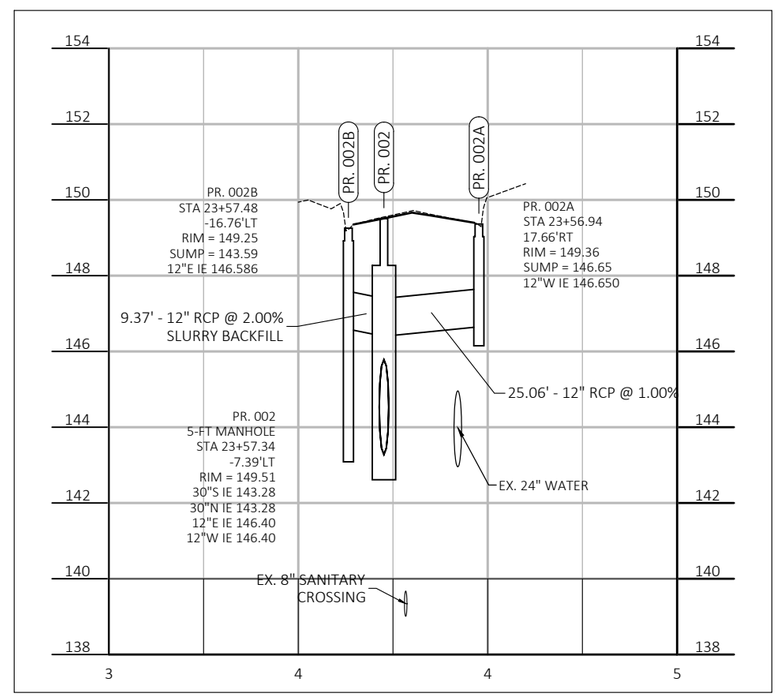

DESCRIPTION
DATE

CITY OF WAUWATOSA
ENGINEERING SERVICES DIVISION

STORM SEWER RELAY
N. 115TH ST.
TO: W. UNDERWOOD PKWY.
FROM: W. BLUE MOUND RD.

CONTRACT: 23-07
FILE NO: 41-996
DRAWN BY: RPC
CHECKED BY: MJA
SCALE: AS SHOWN

C07

FILE NAME : S:\DEPARTMENT FOLDERS\ENGINEERING\ACAD_PROJECTS\23-07 115TH STREET\SHEETSPLAN\115TH STORM PROFILE.DWG
LAYOUT NAME - C07
PLOT DATE : 4/12/2023 1:00 PM
PLOT BY : RYAN CHRISTENSEN
PLOT SCALE : ##########

PROPOSED RECTANGULAR CATCH BASINS

#	Size	Location (C/L structure)	Location (face of curb)	Prop. Grate Elev. (at gutter)	Prop. Castings	Sump (V.F.)
PR. 004A	30" X 36"	19+17.4 AT 17.5' RT	19+17.4 AT 18.1' RT	182.25	R-3246-AL	0.0
PR. 004B	30" X 36"	19+17.5 AT 16.9' LT	19+17.5 AT 17.5' LT	182.07	R-3246-AL	3.0
PR. 006A	30" X 72"	16+25.7 AT 16.9' RT	16+25.65 AT 17.9' RT	186.96	R-3293-2	0.0
PR. 006B	30" X 72"	16+25.9 AT 17.0' LT	16+25.9 AT 17.9' LT	187.23	R-3293-2	3.0
PR. 008A	30" X 72"	53+36.7 AT 14.3' RT	53+36.7 AT 15.0' RT	188.20	R-3293-2	3.0
PR. 008B	30" X 72"	53+36.7 AT 13.9' LT	53+36.7 AT 14.7' LT	188.27	R-3293-2	0.0

PROP. EROSION CONTROL INLET BASKETS

Install in all the inlets and catch basins directly down-surface of all open-cut work prior to starting work or where required by the City Engineer. Inlets and catch basins have curb boxes. Inlet control must be removed when work is completed. Cost to be incidental to contract.

Underground utilities have been shown to a reasonable degree of accuracy using diggers hotline field locates and record drawings. However, the city does not guarantee their exact size, location or depth or that of others not shown. The contractor shall verify the existence of these utilities and those not shown. Costs for locating and delay shall be incidental to the contract.

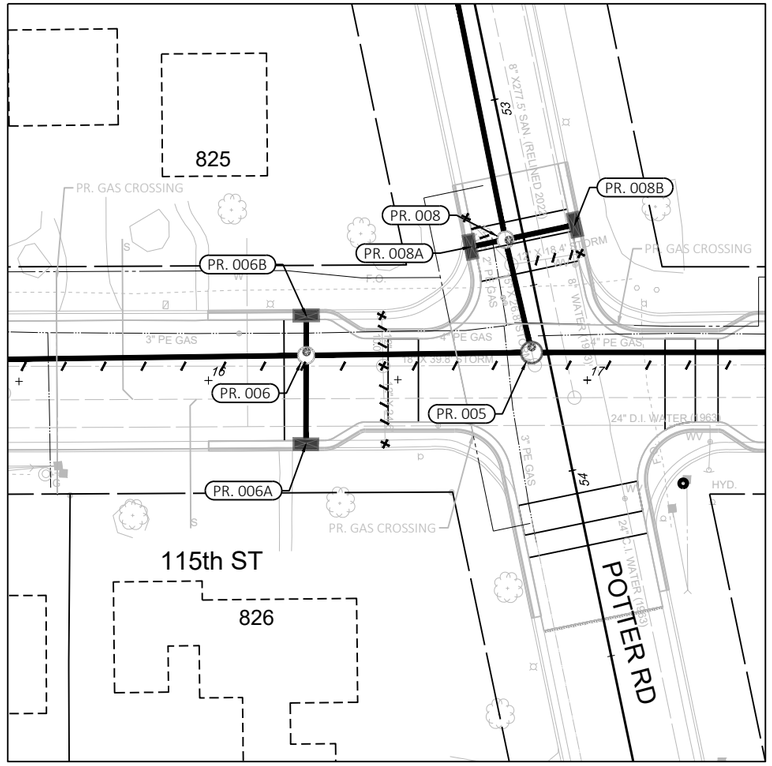

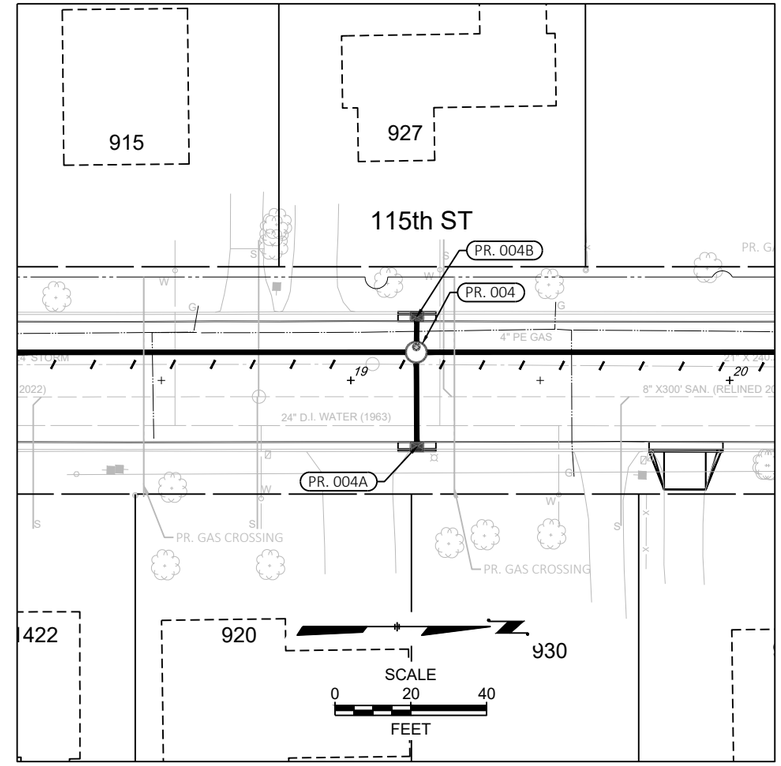

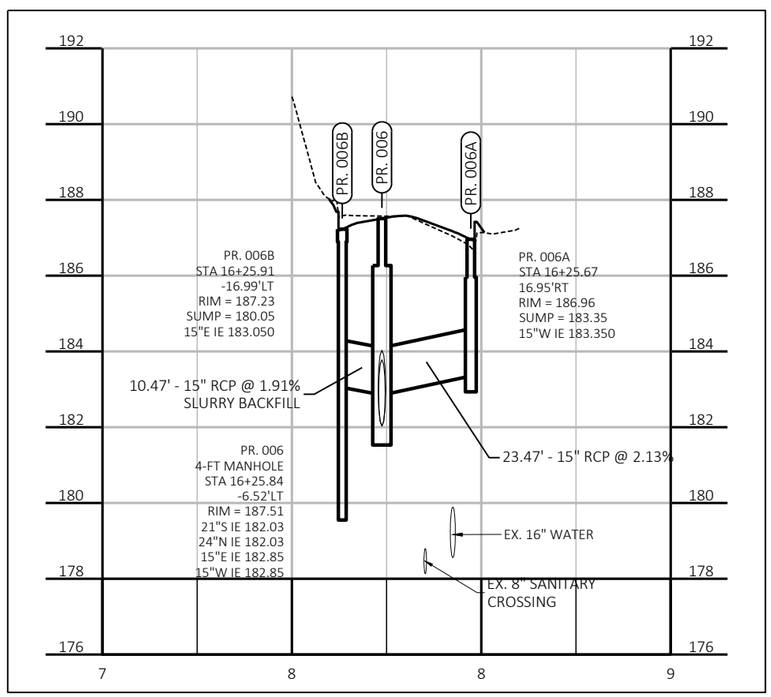

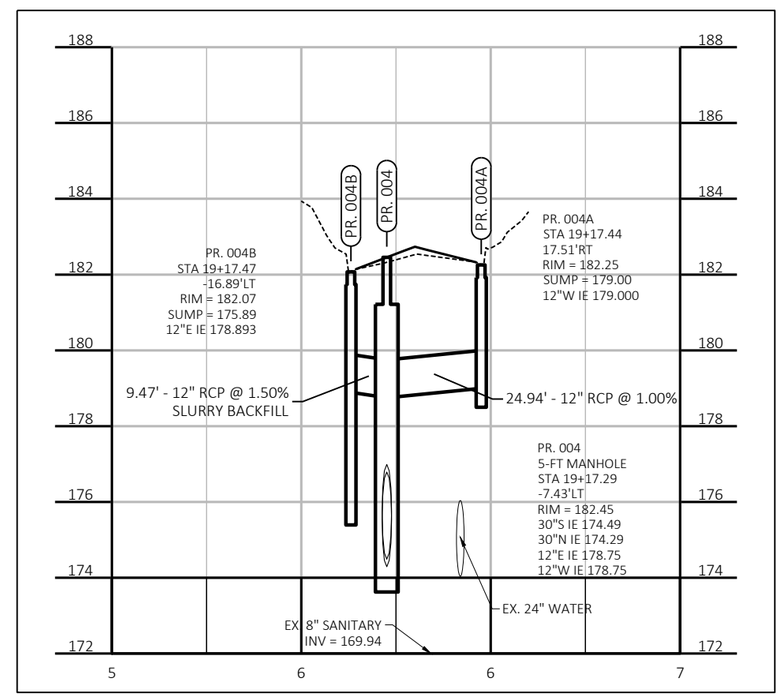

DESCRIPTION

DATE

CITY OF WAUWATOSA
ENGINEERING SERVICES DIVISION

STORM SEWER RELAY

N. 115TH ST.

FROM: W. BLUE MOUND RD.

TO: W. UNDERWOOD PKWY.

CONTRACT: 23-07
FILE NO: 41-996
DRAWN BY: RPC
CHECKED BY: MJA
SCALE: AS SHOWN

C08

FILE NAME : S:\DEPARTMENT FOLDERS\ENGINEERING\ACAD_PROJECTS\23-07 115TH STREET\SHEETSPLAN\115TH STORM PROFILE.DWG
LAYOUT NAME - C08

PLOT DATE : 4/12/2023 1:01 PM

PLOT BY : RYAN CHRISTENSEN

PLOT SCALE : ##########

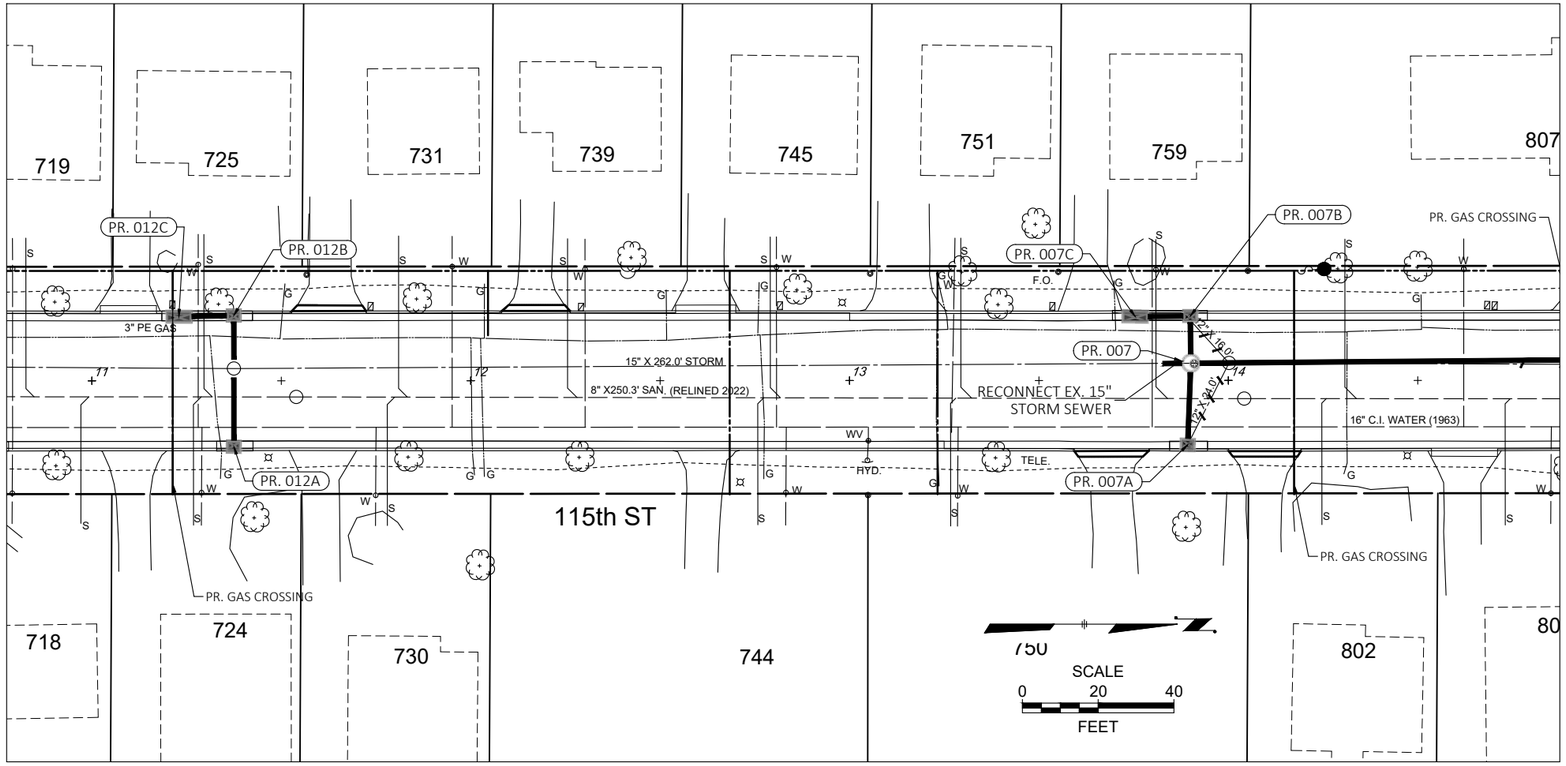

PROPOSED RECTANGULAR CATCH BASINS

#	Size	Location (C/L structure)	Location (face of curb)	Prop. Grate Elev. (at gutter)	Prop. Castings	Sump (V.F.)
PR. 007A	30" X 36"	13+89.2 AT 17.0' RT	13+89.2 AT 18.0' RT	190.94	R-3246-AL	0.0
PR. 007B	30" X 36"	13+90.0 AT 17.0' LT	13+92.4 AT 17.8' LT	191.36	R-3246-AL	3.0
PR. 007C	30" X 72"	13+75.4 AT 16.9' LT	13+85.7 AT 17.8' LT	191.79	R-3293-2	3.0
PR. 012A	30" X 36"	11+37.5 AT 17.4' RT	11+37.5 AT 17.8' RT	203.77	R-3246-AL	0.0
PR. 012B	30" X 36"	11+37.5 AT 17.2' LT	11+47.8 AT 17.8' LT	203.28	R-3246-AL	3.0
PR. 012C	30" X 72"	11+23.0 AT 16.9' LT	11+41.5 AT 17.7' LT	204.12	R-3293-2	3.0

PROPOSED STORM SEWER MANHOLES WITH FLAT-TOP SLABS

#	Dia.	Location (Center of Structure)	Prop. Rim Elev.
EX. 007	48"	11+37.5 AT 3.2' LT	203.97
PR. 006	48"	16+25.8 AT 6.5' LT	187.51

PROP. EROSION CONTROL INLET BASKETS

Install in all the inlets and catch basins directly down-surface of all open-cut work prior to starting work or where required by the City Engineer. Inlets and catch basins have curb boxes. Inlet control must be removed when work is completed. Cost to be incidental to contract.

Underground utilities have been shown to a reasonable degree of accuracy using diggers hotline field locates and record drawings. However, the city does not guarantee their exact size, location or depth or that of others not shown. The contractor shall verify the existence of these utilities and those not shown. Costs for locating and delay shall be incidental to the contract.

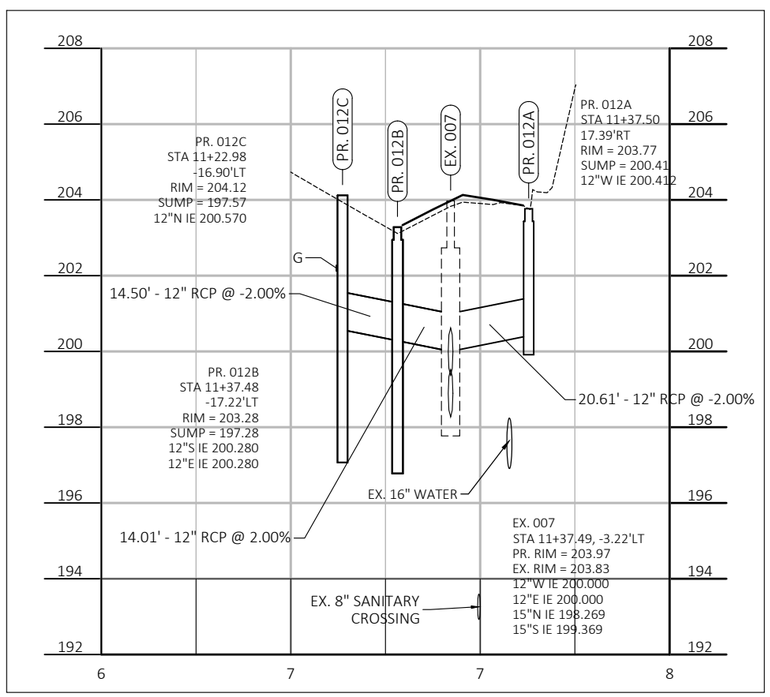

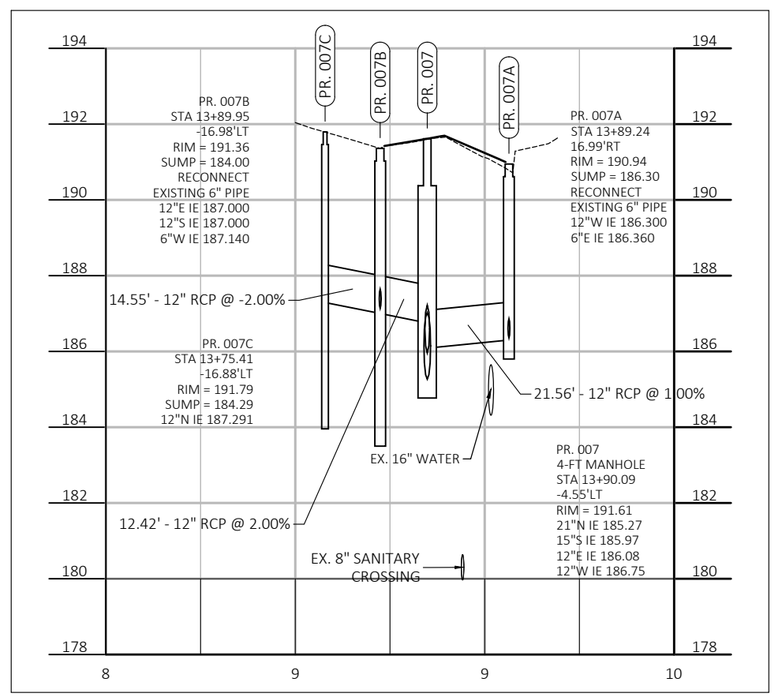

DATE	DESCRIPTION

CITY OF WAUWATOSA
ENGINEERING SERVICES DIVISION

STORM SEWER RELAY

N. 115TH ST.

FROM: W. BLUE MOUND RD.
TO: W. UNDERWOOD PKWY.

CONTRACT: 23-07
FILE NO: 41-996
DRAWN BY: RPC
CHECKED BY: MJA
SCALE: AS SHOWN

C09

FILE NAME : S:\DEPARTMENT FOLDERS\ENGINEERING\ACAD_PROJECTS\23-07 115TH STREET\SHEETSPLAN\115TH STORM PROFILE.DWG
LAYOUT NAME - C09
PLOT DATE : 4/12/2023 1:01 PM
PLOT BY : RYAN CHRISTENSEN
PLOT SCALE : ##########

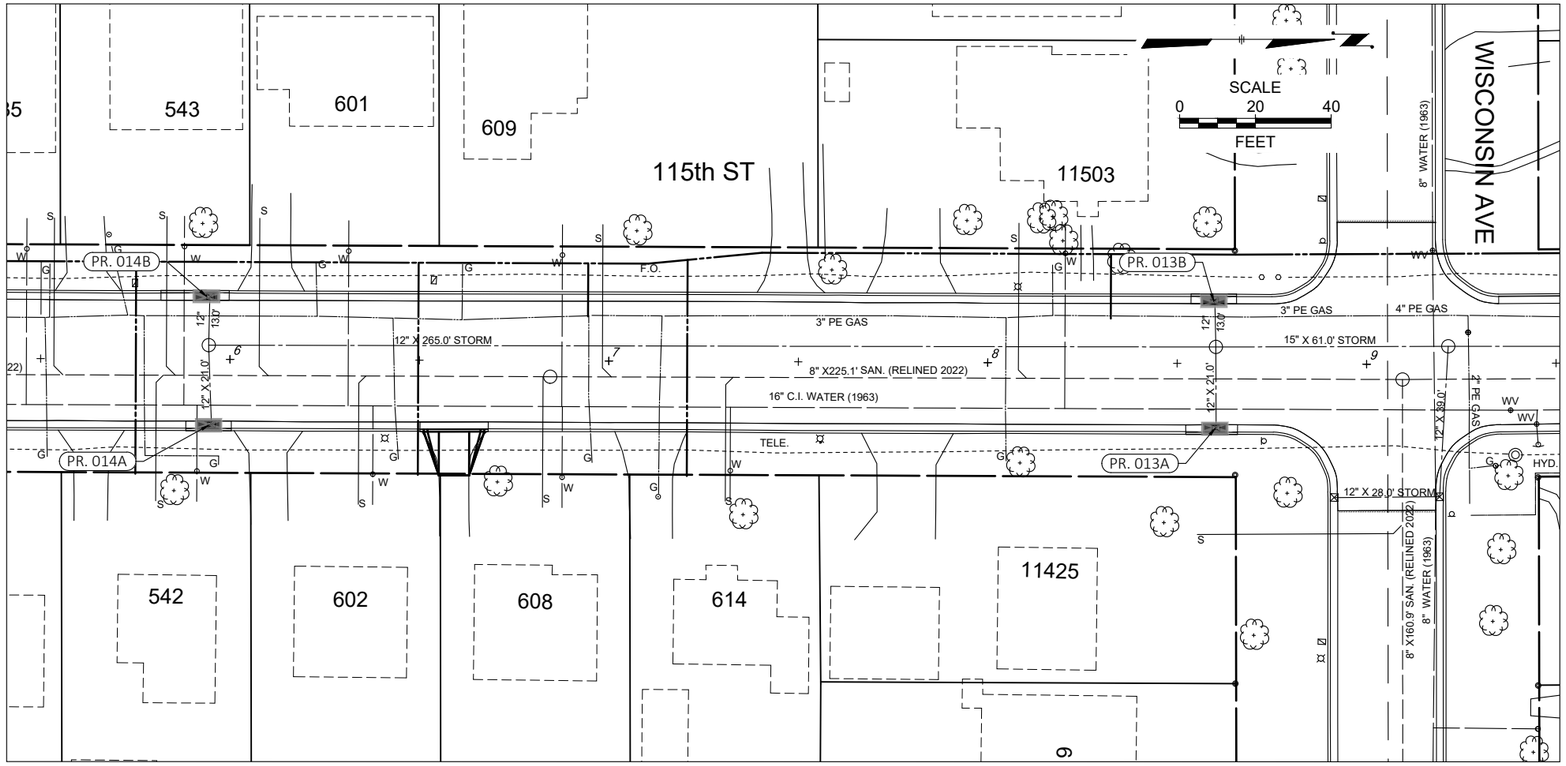

PROPOSED RECTANGULAR CATCH BASINS

#	Size	Location (C/L structure)	Location (face of curb)	Prop. Grate Elev. (at gutter)	Prop. Castings	Sump (V.F.)
PR. 013A	30" X 72"	8+60.0 AT 17.1' RT	8+60.0 AT 18.0' RT	215.22	R-3293-2	0.0
PR. 013B	30" X 72"	8+59.6 AT 16.5' LT	8+59.6 AT 17.7' LT	214.98	R-3293-2	3.0
PR. 014A	30" X 72"	5+94.4 AT 17.4' RT	5+94.4 AT 18.2' RT	217.06	R-3293-2	0.0
PR. 014B	30" X 72"	5+93.7 AT 16.6' LT	5+93.7 AT 17.5' LT	217.11	R-3293-2	3.0

PROP. EROSION CONTROL INLET BASKETS
Install in all the inlets and catch basins directly down-surface of all open-cut work prior to starting work or where required by the City Engineer. Inlets and catch basins have curb boxes. Inlet control must be removed when work is completed. Cost to be incidental to contract.

Underground utilities have been shown to a reasonable degree of accuracy using diggers hotline field locates and record drawings. However, the city does not guarantee their exact size, location or depth or that of others not shown. The contractor shall verify the existence of these utilities and those not shown. Costs for locating and delay shall be incidental to the contract.

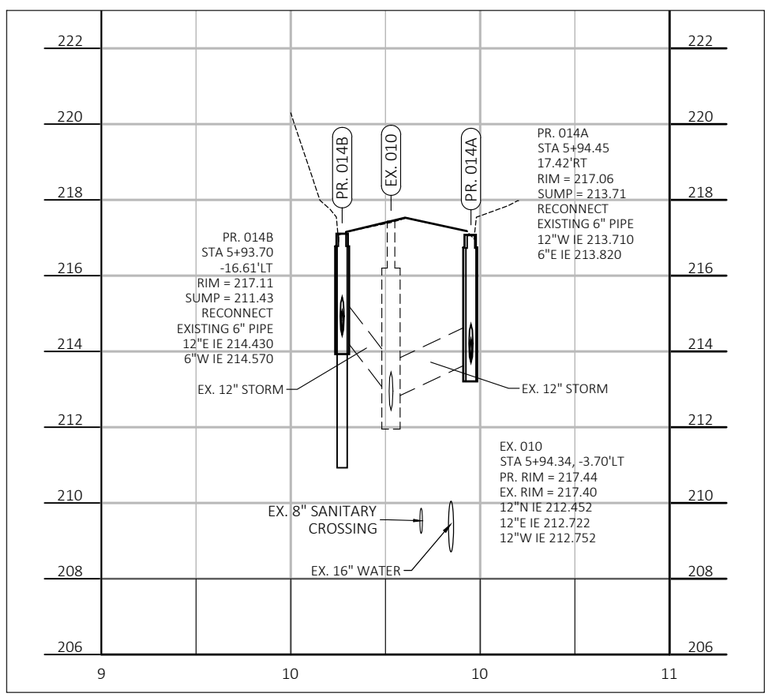

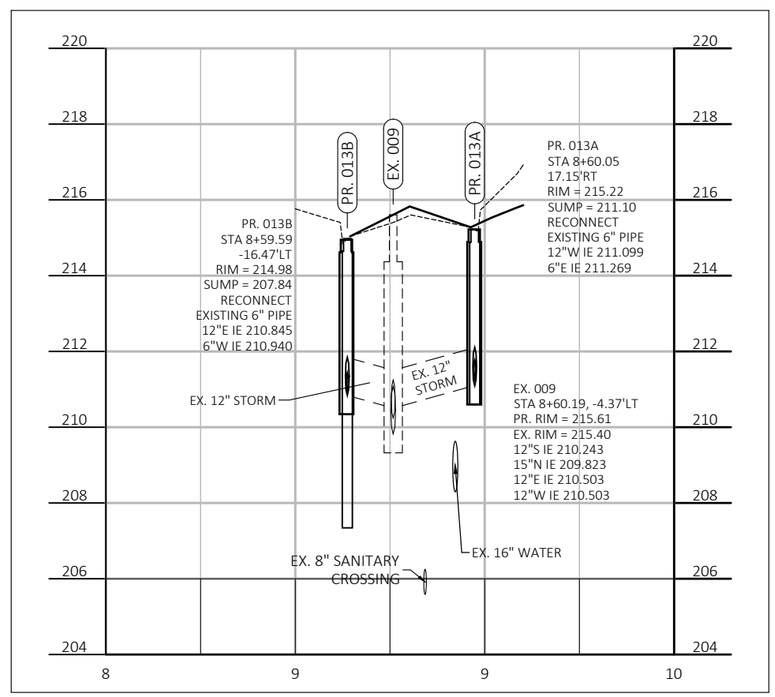

DATE	DESCRIPTION

CITY OF WAUWATOSA
ENGINEERING SERVICES DIVISION

STORM SEWER RELAY

N. 115TH ST.

FROM: W. BLUE MOUND RD.
TO: W. UNDERWOOD PKWY.

CONTRACT: 23-07
FILE NO: 41-996
DRAWN BY: RPC
CHECKED BY: MJA
SCALE: AS SHOWN

C10

FILE NAME : S:\DEPARTMENT FOLDERS\ENGINEERING\ACAD_PROJECTS\23-07 115TH STREET\SHEETSPLAN\115TH STORM PROFILE.DWG
LAYOUT NAME - C10
PLOT DATE : 4/12/2023 1:01 PM
PLOT BY : RYAN CHRISTENSEN
PLOT SCALE : ##########

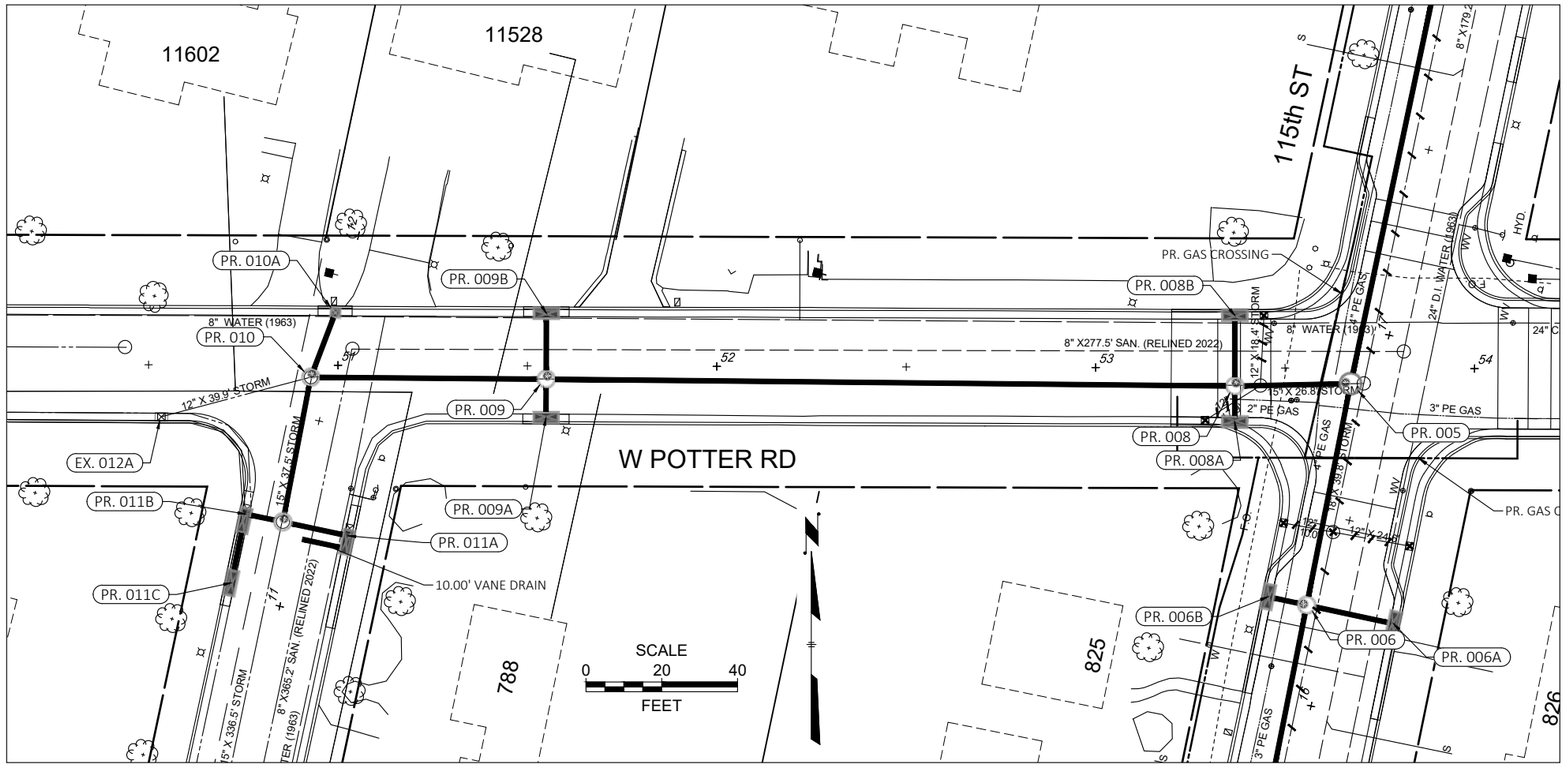

PROP. EROSION CONTROL INLET BASKETS
Install in all the inlets and catch basins directly down-surface of all open-cut work prior to starting work or where required by the City Engineer. Inlets and catch basins have curb boxes. Inlet control must be removed when work is completed. Cost to be incidental to contract.

Underground utilities have been shown to a reasonable degree of accuracy using diggers hotline field locates and record drawings. However, the city does not guarantee their exact size, location or depth or that of others not shown. The contractor shall verify the existence of these utilities and those not shown. Costs for locating and delay shall be incidental to the contract.

PROPOSED RECTANGULAR CATCH BASINS

#	Size	Location (C/L structure)	Location (face of curb)	Prop. Grate Elev. (at gutter)	Prop. Castings	Sump (V.F.)
PR. 008A	30" X 72"	53+36.7 AT 14.3' RT	53+36.7 AT 15.0' RT	188.20	R-3293-2	3.0
PR. 008B	30" X 72"	53+36.7 AT 13.9' LT	53+36.7 AT 14.7' LT	188.27	R-3293-2	0.0
PR. 009A	30" X 72"	51+54.9 AT 13.7' RT	51+54.9 AT 14.7' RT	195.13	R-3293-2	3.0
PR. 009B	30" X 72"	51+55.0 AT 13.9' LT	51+55.0 AT 14.84' LT	194.93	R-3293-2	0.0

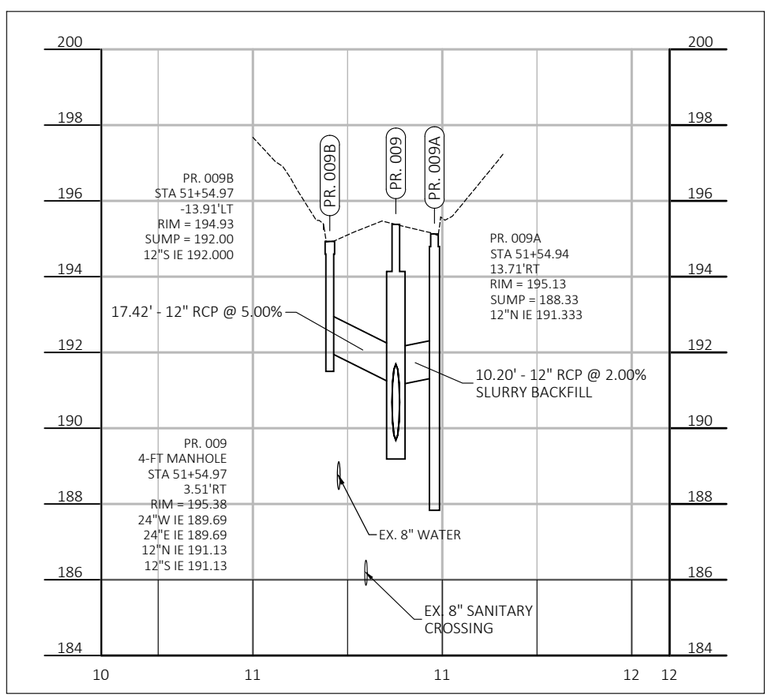

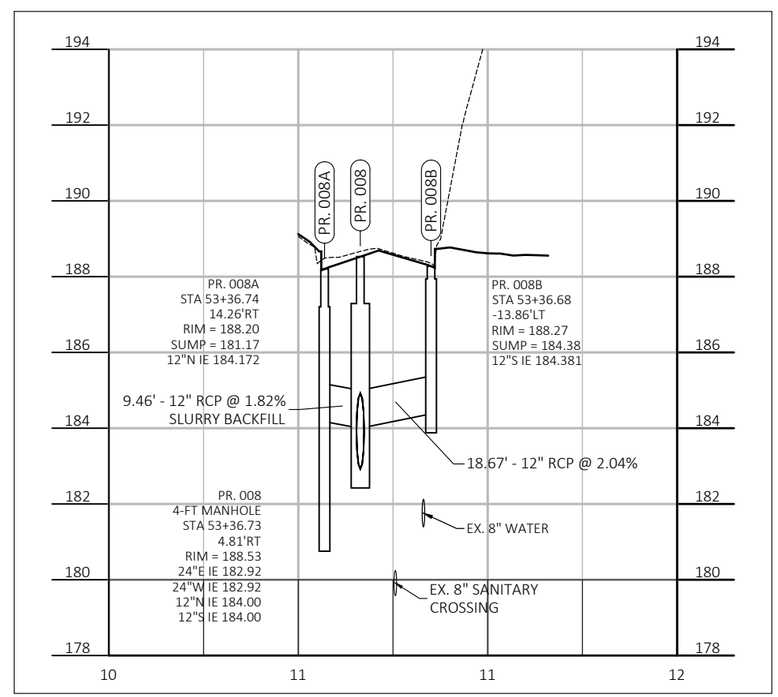

DATE	DESCRIPTION

CITY OF WAUWATOSA
ENGINEERING SERVICES DIVISION

STORM SEWER RELAY
W. POTTER RD.

FROM: N. 116TH ST.
TO: N. 115TH ST.

CONTRACT: 23-07
FILE NO: 41-996
DRAWN BY: RPC
CHECKED BY: MJA
SCALE: AS SHOWN

C11

FILE NAME : S:\DEPARTMENT FOLDERS\ENGINEERING\ACAD_PROJECTS\23-07 115TH STREET\SHEETSPLAN\115TH STORM PROFILE.DWG
LAYOUT NAME - C11
PLOT DATE : 4/12/2023 1:02 PM
PLOT BY : RYAN CHRISTENSEN
PLOT SCALE : ##########

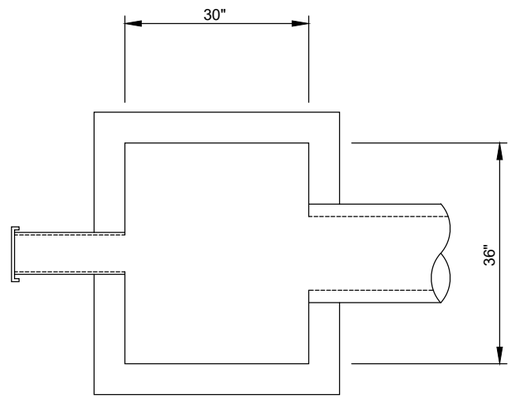

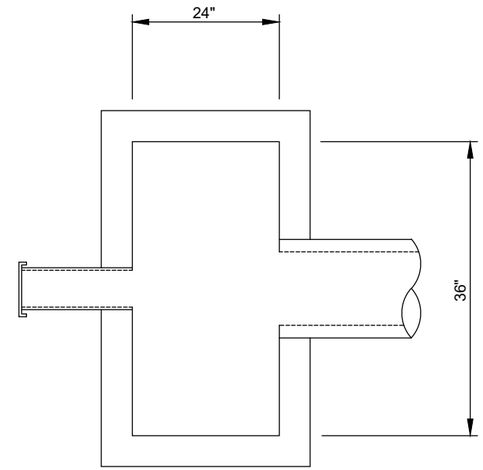

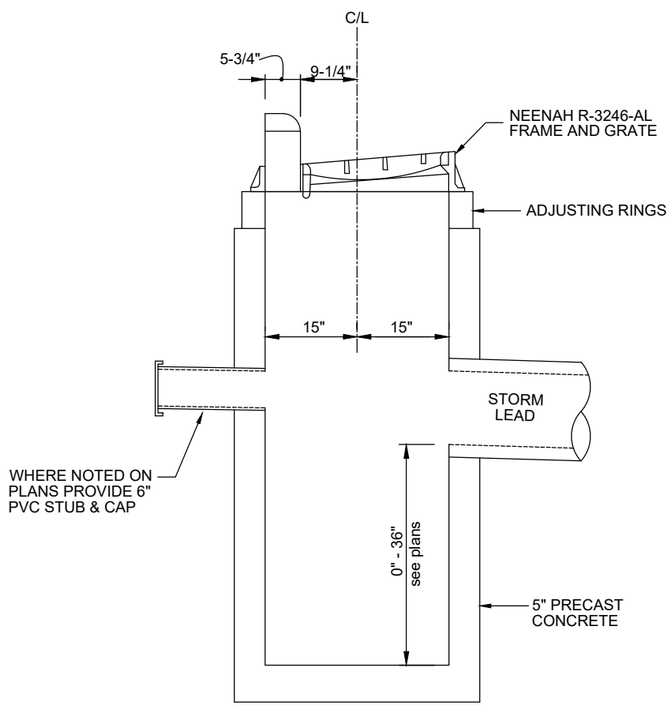

30" X 36" STORM SEWER CATCH BASIN

NTS

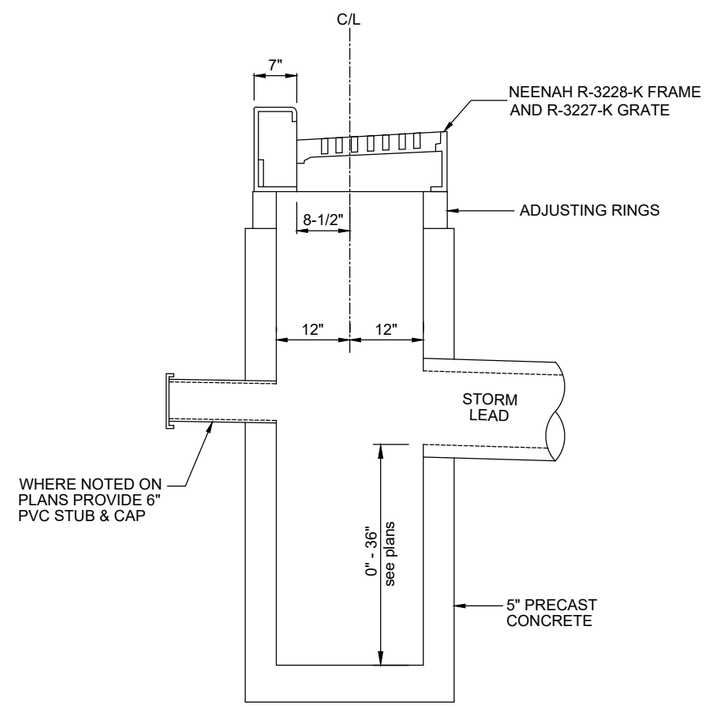

24" X 36" STORM SEWER CATCH BASIN

NTS

DATE	DESCRIPTION

CITY OF WAUWATOSA
ENGINEERING SERVICES DIVISION

STORM SEWER DETAILS

N 115th ST

TO:

FROM:

CONTRACT: 23-07
FILE NO: 41-996
DRAWN BY: WAT
CHECKED BY: MJA
SCALE:

C12

FILE NAME : S:\DEPARTMENT FOLDERS\ENGINEERING\ACAD_PROJECTS\23-07 115TH STREET\DESIGN\N 115TH ST STORM SEWER DETAILS.DWG PLOT DATE : 4/12/2023 12:45 PM PLOT BY : WTREU

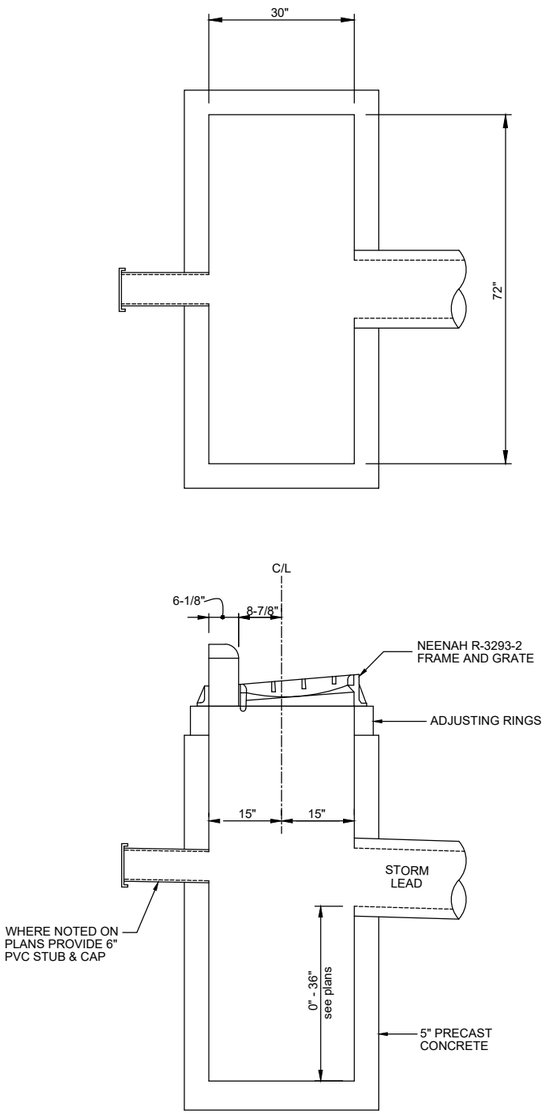

30" X 72" STORM SEWER CATCH BASIN

NTS

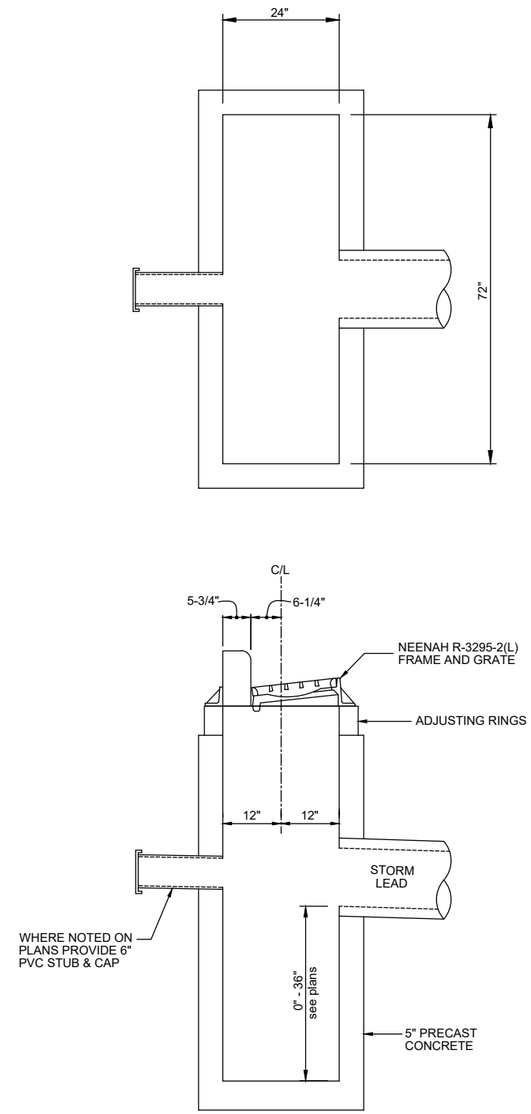

24" X 72" STORM SEWER CATCH BASIN

NTS

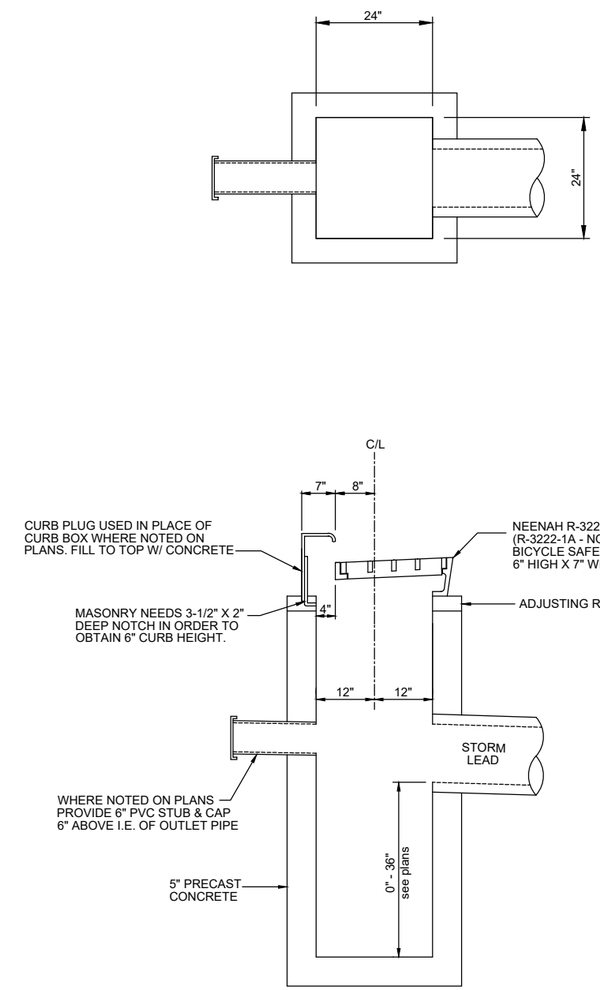

24" X 24" STORM SEWER CATCH BASIN

NTS

DATE	DESCRIPTION

CITY OF WAUWATOSA
ENGINEERING SERVICES DIVISION

STORM SEWER DETAILS

N 115th ST

TO:

FROM:

CONTRACT: 23-07
FILE NO: 41-996
DRAWN BY: WAT
CHECKED BY: MJA
SCALE:

C13

FILE NAME : S:\DEPARTMENT FOLDERS\ENGINEERING\ACAD_PROJECTS\23-07 115TH STREET\DESIGN\N 115TH ST STORM SEWER DETAILS.DWG PLOT DATE : 4/12/2023 12:45 PM PLOT BY : WTREU

GENERAL NOTES

DETAILS OF CONSTRUCTION, MATERIALS AND WORKMANSHIP NOT SHOWN ON THIS DRAWING SHALL CONFORM TO THE PERTINENT REQUIREMENTS OF THE STANDARD SPECIFICATIONS AND THE APPLICABLE SPECIAL PROVISIONS.

ENCASEMENT: THE ENCASING MATERIAL AROUND THE PIPE SHALL BE IN ACCORDANCE WITH SPECIFICATIONS OF 501.4.3.3 FOR CONCRETE PAVEMENT.

THE PIPE USED SHALL BE A 15" DIAMETER SDR-35 POLYVINYL CHLORIDE SEWER PIPE. THE PIPE SHALL CONFORM TO THE REQUIREMENTS SET FORTH IN STANDARD SPECIFICATION 612.2.6. ALL PIPE AND FITTINGS (CAPS OR COUPLINGS) ARE INCIDENTAL TO THE SLOTTED VANE DRAIN.

SURFACE DRAIN: BEFORE PAVING OVER THE DRAIN. COVER THE TOP OF THE DRAIN TO KEEP MATERIAL OUT OF THE PIPE. THE FINISHED GRADE SHOULD BE FLUSH WITH THE TOP OF THE DRAIN.

THE ANGLE OF THE DRAIN TO THE FLOW OF WATER SHOULD BE AS CLOSE TO 90° AS POSSIBLE.

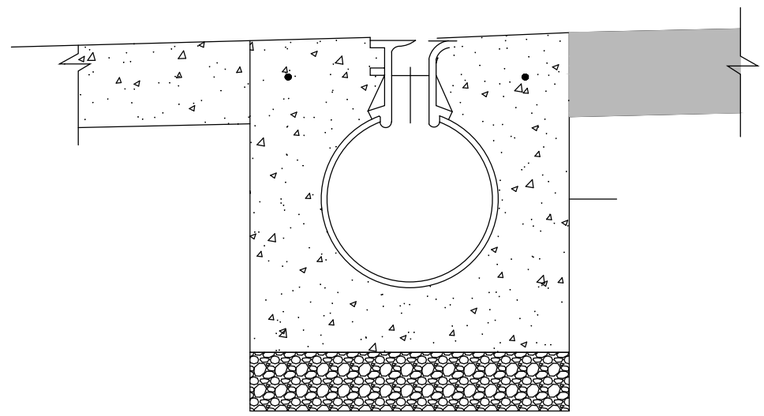

SECTION B–B

NOTES

1. APPROXIMATE WEIGHT OF DRAIN SLOTTED VANE CASTING = 87 POUNDS
2. THE CASTING AND PVC PIPE SHALL BE SECURELY STAKED AND ANCHORED INTO PLACE DURING THE POURING OF THE CONCRETE ENCASEMENT.

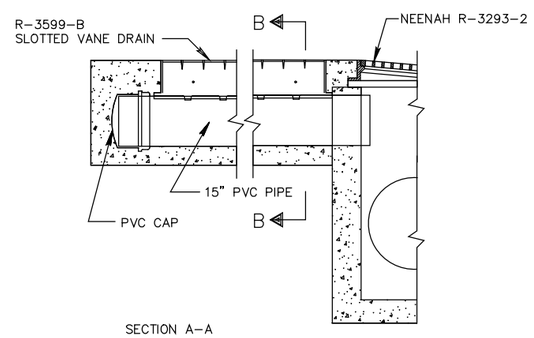

SECTION A–A

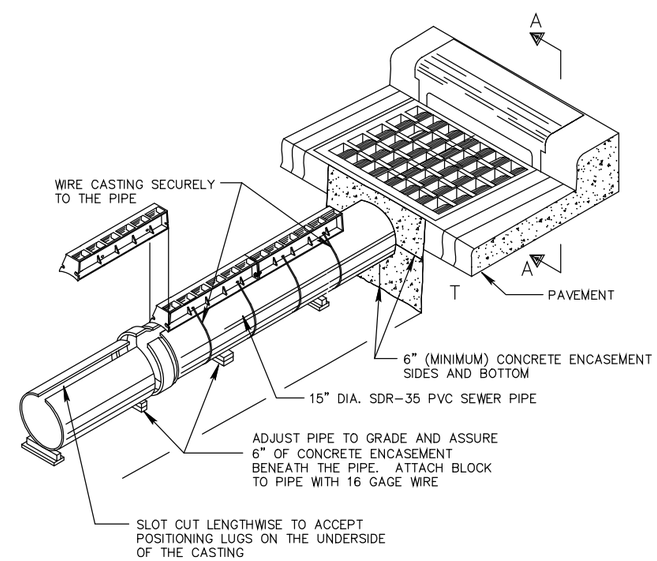

SLOTTED VANE DRAIN

NTS

DATE	DESCRIPTION

CITY OF WAUWATOSA
ENGINEERING SERVICES DIVISION

STORM SEWER DETAILS

N 115th ST

FROM:
TO:

CONTRACT: 23-07
FILE NO: 41-996
DRAWN BY: WAT
CHECKED BY: MJA
SCALE:

C14

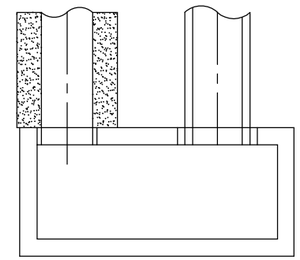

SLOTTED VANE DRAIN CATCH BASIN CONNECTION DETAIL

NTS

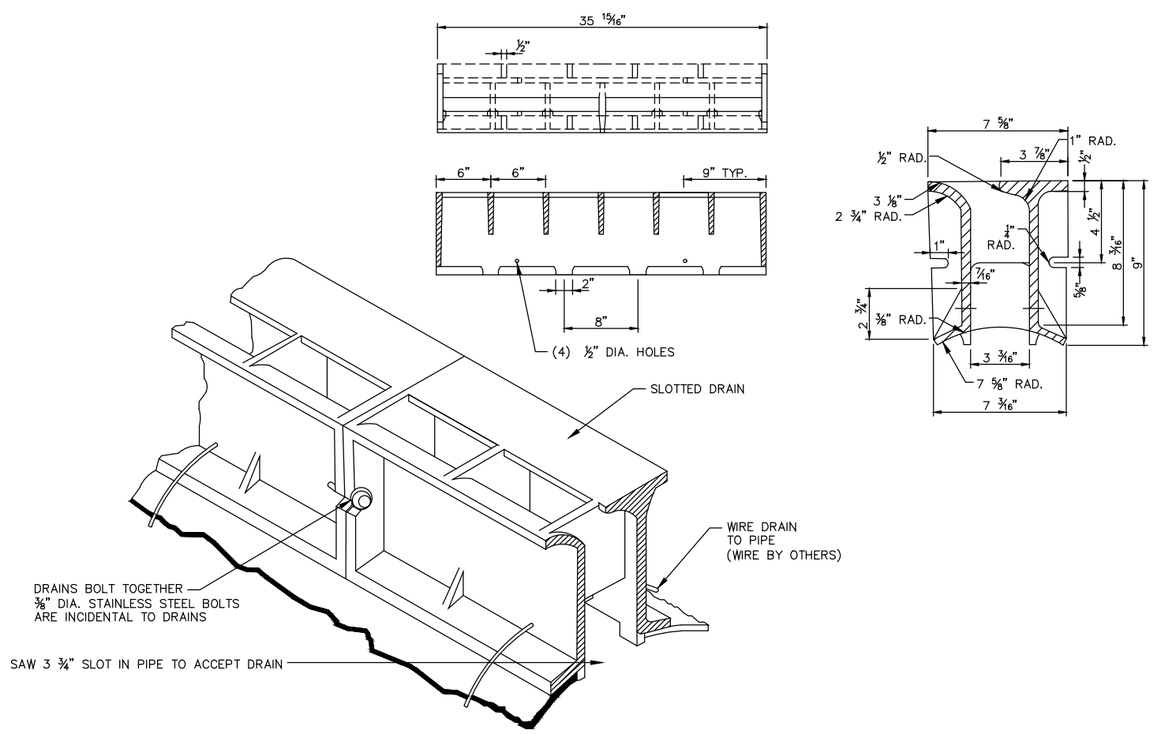

SLOTTED VANE DRAIN - R-3599-B

NTS

DATE	DESCRIPTION

CITY OF WAUWATOSA
ENGINEERING SERVICES DIVISION

STORM SEWER DETAILS

N 115th ST

TO:

FROM:

CONTRACT: 23-07
FILE NO: 41-996
DRAWN BY: WAT
CHECKED BY: MJA
SCALE:

C15

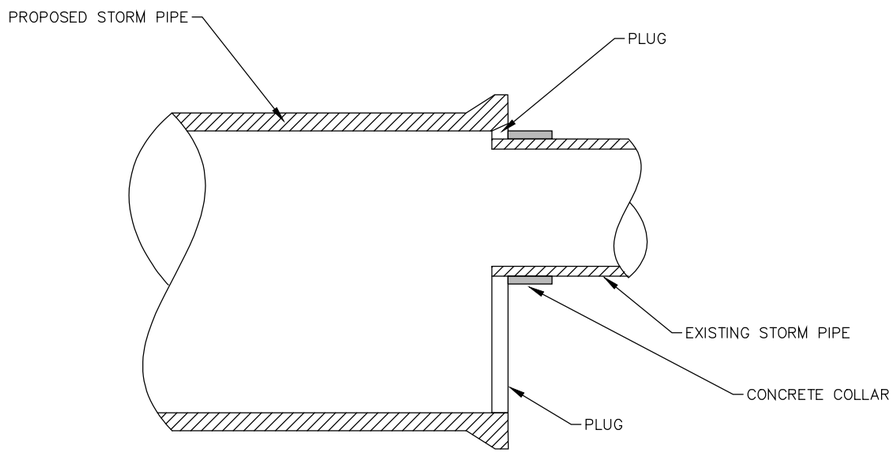

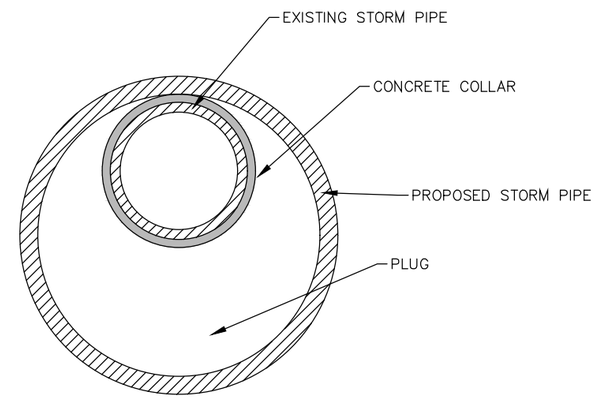

STORM SEWER PLUG

NTS

DATE	DESCRIPTION

CITY OF WAUWATOSA
ENGINEERING SERVICES DIVISION

STORM SEWER DETAILS

N 115th ST

FROM:
TO:

CONTRACT: 23-07
FILE NO: 41-996
DRAWN BY: WAT
CHECKED BY: MJA
SCALE:

C16

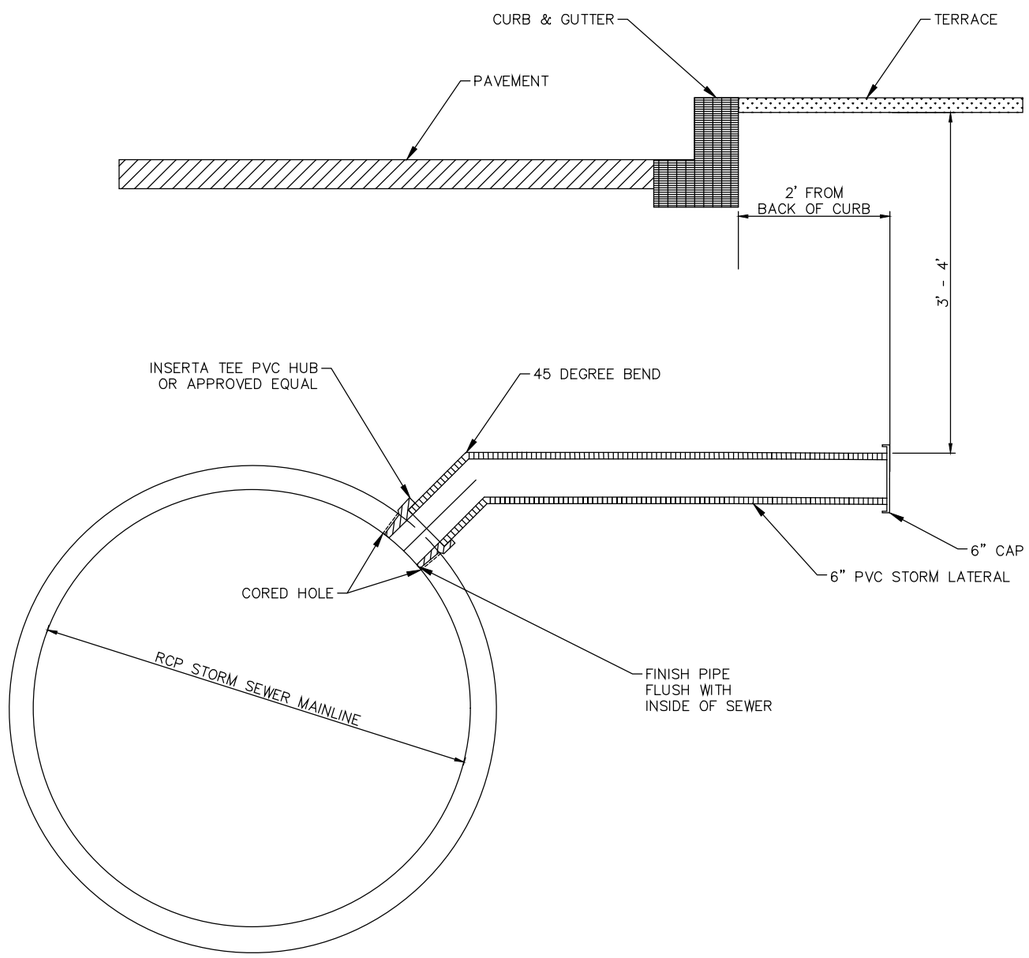

GENERAL NOTES:

1. CORED CONNECTIONS – CORING SHALL BE UNDERSTOOD TO MEAN CUTTING A CIRCULAR HOLE INTO THE MAIN SEWER USING A MECHANICALLY–POWERED HOLLOW CYLINDRICAL BIT. THE FITTING AND METHOD OF ATTACHMENT TO THE MAIN SEWER SHALL BE APPROVED BY THE CITY OF WAUWATOSA.

2. ALL ADHESIVES USED SHALL BE COMPATIBLE TO THE PIPE MATERIAL.

3. PVC SHALL BE SDR 35

4. CORE HOLE SHALL BE SMALLER THAN OUTSIDE DIAMETER OF BELL.

5. HORIZONTAL LOCATION IS APPROXIMATE

6. CONTRACTOR IS RESPONSIBLE FOR FINAL VERTICAL PROFILE. BENDS AND FITTINGS ARE OPTIONAL TO AVOID UTILITY CONFLICTS. ANY BENDS AND FITTINGS ARE INCIDENTAL TO THE STORM LATERAL UNIT PRICE.

STORM LATERAL CONNECTION TO SEWER

NTS

DESCRIPTION

DATE

CITY OF WAUWATOSA
ENGINEERING SERVICES DIVISION

STORM SEWER DETAILS

N 115th ST

TO:

FROM:

CONTRACT: 23-07
FILE NO: 41-996
DRAWN BY: WAT
CHECKED BY: MJA
SCALE:

C17

GENERAL NOTES

1. ELEVATIONS SHOWN FOR CURB AND GUTTER ARE FLANGE LINE ELEVATIONS UNLESS OTHERWISE NOTED
2. NO TREES OR SHRUBS SHALL BE DISTURBED WITHOUT THE WRITTEN APPROVAL OF THE ENGINEER
3. ALL CURB RAMP OPENING TAPERS ADJACENT TO GRASS ARE 2' UNLESS OTHERWISE SHOWN ON THE CURB RAMP DETAILS. ALL CURB RAMP TAPERS ADJACENT TO PAVED SURFACES SHALL BE 10:1 MAX.
4. CONTRACTOR SHALL PRESERVE AND PROTECT ALL RETAINING WALLS AND OTHER APPURTENANCES ADJACENT TO THE PROJECT.
5. A SAWCUT IS REQUIRED AT THE EDGE OF ALL CURB AND GUTTER; SIDEWALK; AND PAVEMENT REPLACEMENT LOCATIONS. SAWING IS INCIDENTAL TO THE CONTRACT.
6. 30" X 30" FELTED ISOLATION BOX OUT REQUIRED AT ALL LIGHT POLES AND CONCRETE POLE BASES PLACED WITH IN CONCRETE.
7. EXCESS PULVERIZED MATERIAL MUST BE HAULED TO THE DPW YARD, 11100 W WALNUT RD, WAUWATOSA, WI 53226
8. CONTRACTOR MUST MAINTAIN DRIVEUP ACCESS TO MAILBOXES AT ALL TIMES. TEMPORARY MAILBOX CLUSTERS MAY BE REQUIRED AS DETERMINED BY THE USPS AND ARE INCIDENTAL TO THE CONSTRUCTION.

ORDER OF PAVING PLAN SHEETS

GENERAL NOTES

PAVING OVERVIEW

TYPICAL SECTIONS

CONSTRUCTION DETAILS

PLAN AND PROFILE

PAVEMENT GRADES

INTERSECTION DETAILS

CURB RAMP DETAILS

PAVEMENT MARKING

MISCELLANEOUS QUANTITIES

CONSTRUCT PAVEMENT WITH THE FOLLOWING

	LOWER LAYER		UPPER LAYER	
LOCATION	HMA	DEPTH	HMA	DEPTH
7-INCH HMA PAVEMENT	3 MT 58-28 S	5-INCHES	4 MT 58-28 S	2-INCHES
8-INCH CONCRETE PAVEMENT				

DATE	DESCRIPTION

CITY OF WAUWATOSA
ENGINEERING SERVICES DIVISION

PAVING GENERAL NOTES

115TH STREET IMPROVEMENTS

CONTRACT: 23-07
FILE NO: 15-1075
DRAWN BY: RPC
CHECKED BY: JMS
SCALE: AS SHOWN

D01

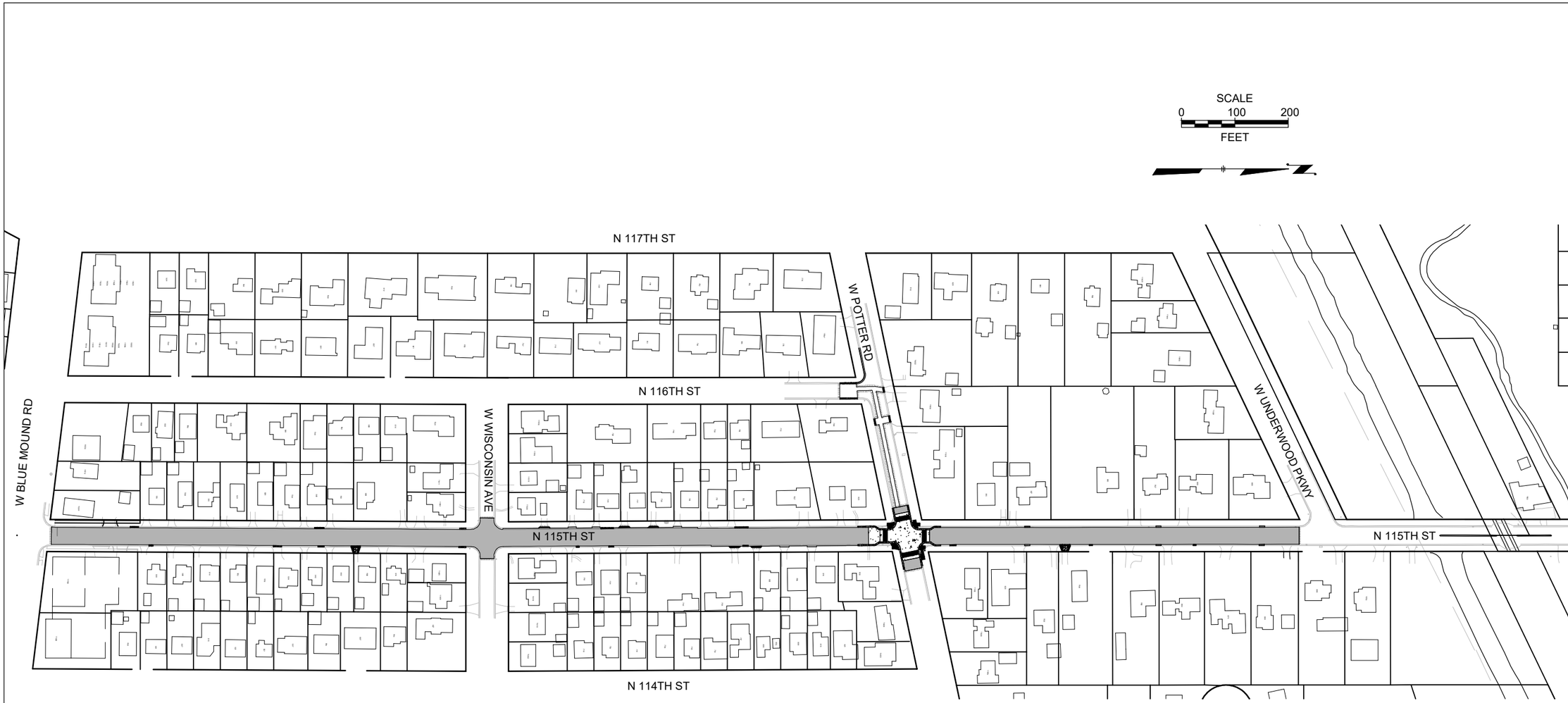

LEGEND:

- 7" HMA PAVEMENT OVER 5-1/2" PULVERIZED MATERIAL
- 8" CONCRETE PAVEMENT OVER 6" BASE AGGREGATE DENSE 1-1/4"
- UTILITY TRENCH RESTORATION 4-1/2" HMA PAVEMENT OVER 5" BASE AGGREGATE DENSE 1-1/4"
- XXXXXXX SAWCUT

DATE	DESCRIPTION

CITY OF WAUWATOSA
ENGINEERING SERVICES DIVISION

PAVING OVERVIEW

N. 115TH ST.

FROM: W. BLUE MOUND RD.
TO: W. UNDERWOOD PKWY.

CONTRACT:	23-07
FILE NO:	15-1075
DRAWN BY:	RPC
CHECKED BY:	JMS
SCALE:	AS SHOWN

D02

FILE NAME : S:\DEPARTMENT FOLDERS\ENGINEERING\ACAD_PROJECTS\23-07 115TH STREET\SHEETSPLAN\02 PAVING OVERVIEW.DWG
LAYOUT NAME - PAV OVERVIEW
PLOT DATE : 4/12/2023 10:53 AM
PLOT BY : RYAN CHRISTENSEN

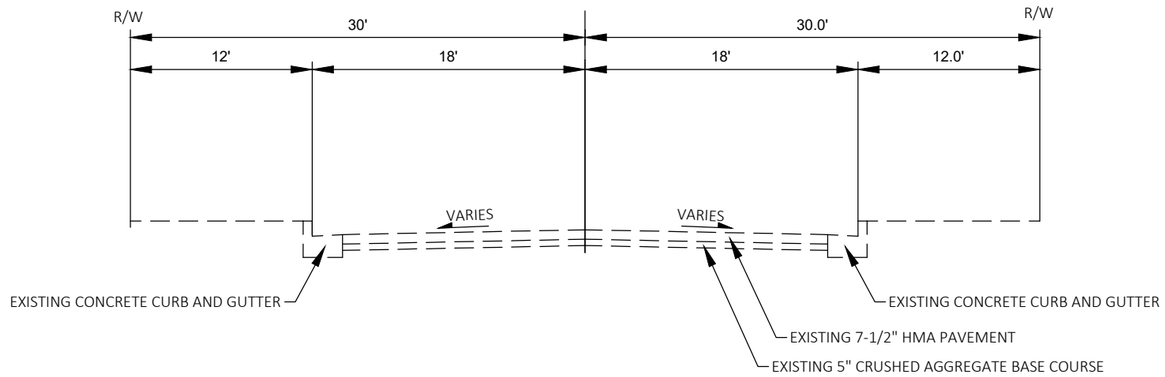

EXISTING TYPICAL SECTION
NORTH 115TH STREET

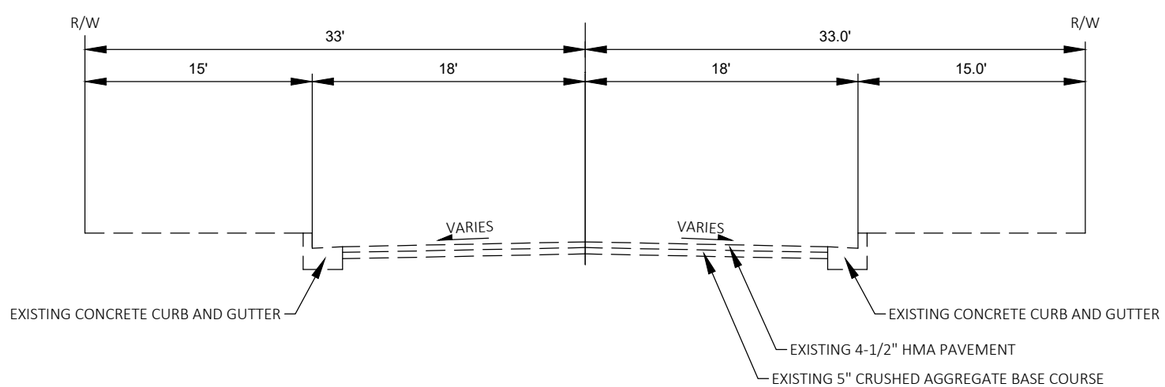

EXISTING TYPICAL SECTION
WEST POTTER ROAD

DATE	DESCRIPTION

CITY OF WAUWATOSA
ENGINEERING SERVICES DIVISION

TYPICAL SECTIONS

N. 115TH ST.

CONTRACT: 23-07
FILE NO: 15-1075
DRAWN BY: RPC/JMS
CHECKED BY: JMS
SCALE: NOT TO SCALE

D03

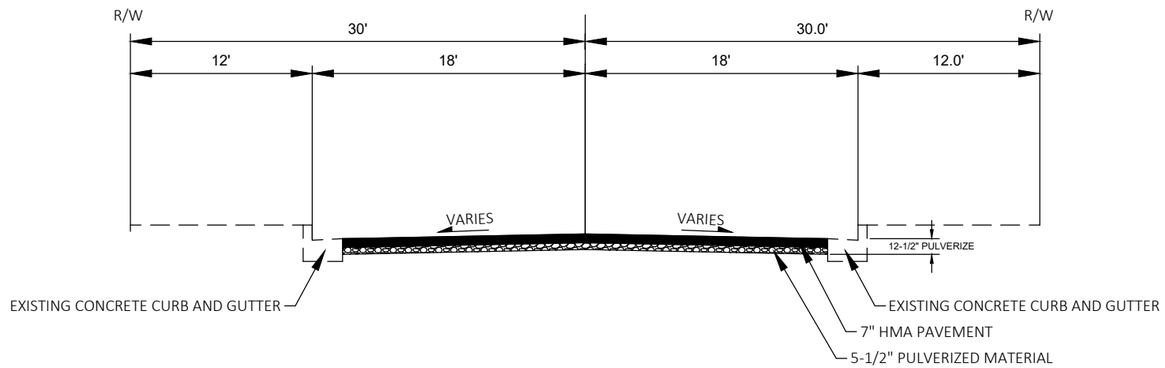

PROPOSED TYPICAL SECTION
HMA PAVEMENT
NORTH 115TH STREET
STA 0+88.95 - STA 16+20.00
STA 17+34.51 - STA 24+26.85

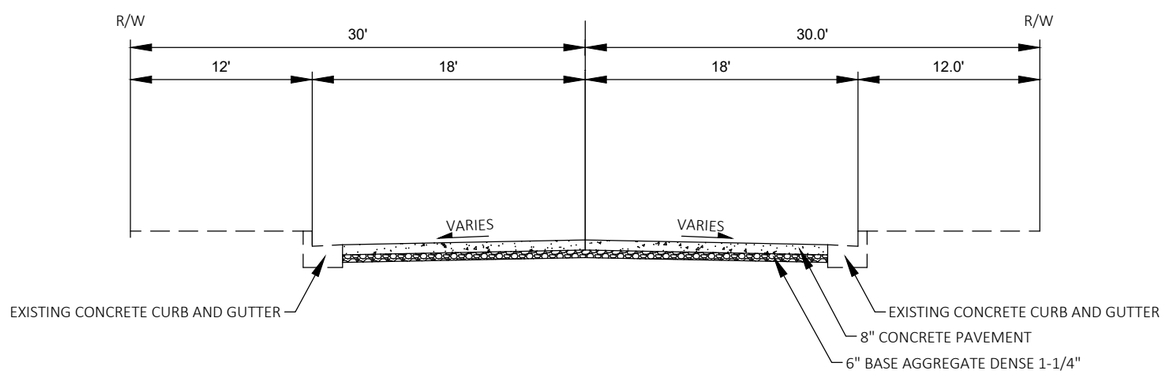

PROPOSED TYPICAL SECTION
CONCRETE PAVEMENT
NORTH 115TH STREET
STA 16+20.00 - STA 17+34.51

DATE	DESCRIPTION

CITY OF WAUWATOSA
ENGINEERING SERVICES DIVISION

TYPICAL SECTIONS
N. 115TH ST.

CONTRACT: 23-07
FILE NO: 15-1075
DRAWN BY: RPC/JMS
CHECKED BY: JMS
SCALE: NOT TO SCALE

D04

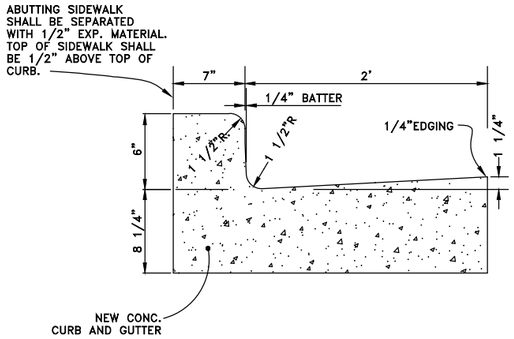

31" CONCRETE
CURB & GUTTER

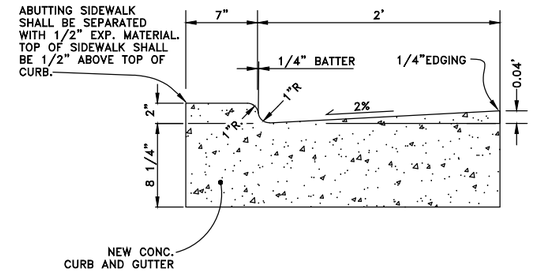

31" CONCRETE
CURB AND GUTTER
(INTERSECTION)

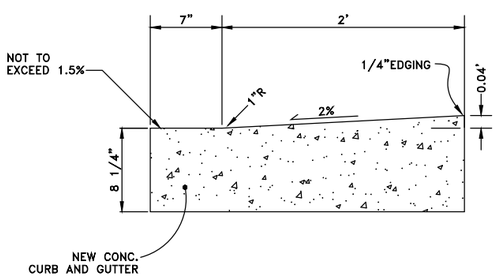

CONCRETE CURB AND GUTTER
AT CURB RAMP OPENING

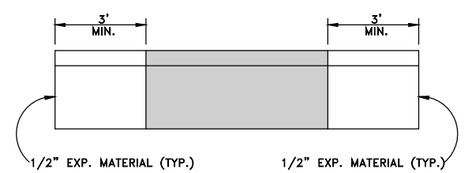

CONCRETE CURB AND GUTTER
REPLACEMENT AT CATCH BASIN

DATE	DESCRIPTION

CITY OF WAUWATOSA
ENGINEERING SERVICES DIVISION

CONSTRUCTION DETAILS

115TH STREET IMPROVEMENTS

CONTRACT:	23-07
FILE NO:	15-1075
DRAWN BY:	RPC
CHECKED BY:	JMS
SCALE:	NOT TO SCALE

D05

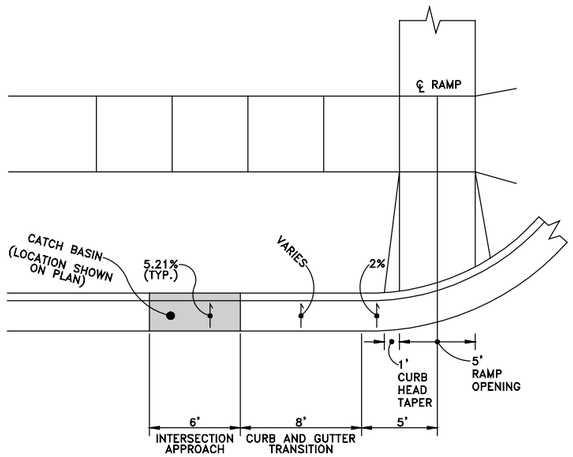

RAISED INTERSECTION LAYOUT

ALL PAID AS 31" CONCRETE CURB & GUTTER (INTERSECTION)

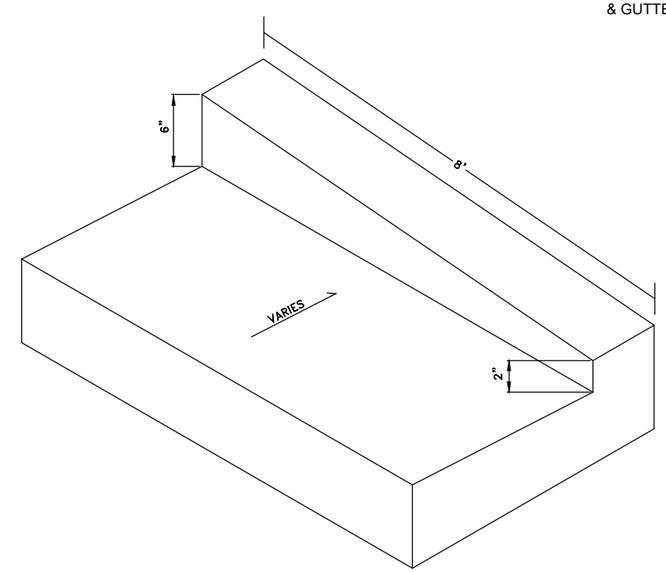

CURB & GUTTER TRANSITION
AT RAISED INTERSECTION
N. 115TH ST

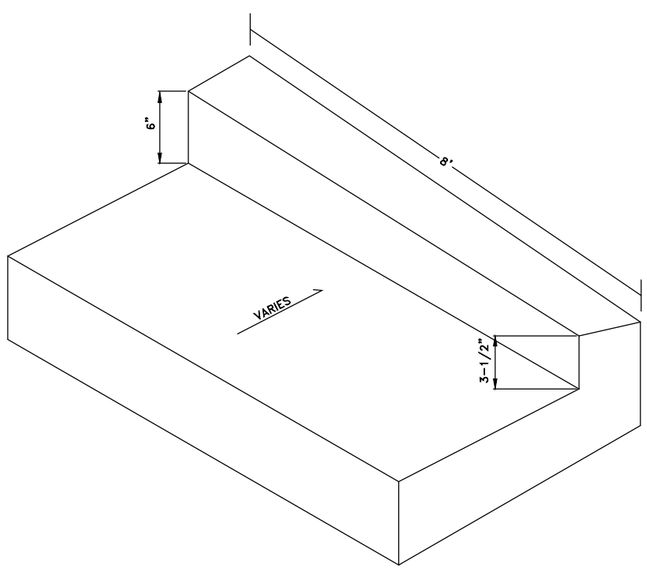

CURB & GUTTER TRANSITION
AT RAISED INTERSECTION
POTTER RD., WEST LEG

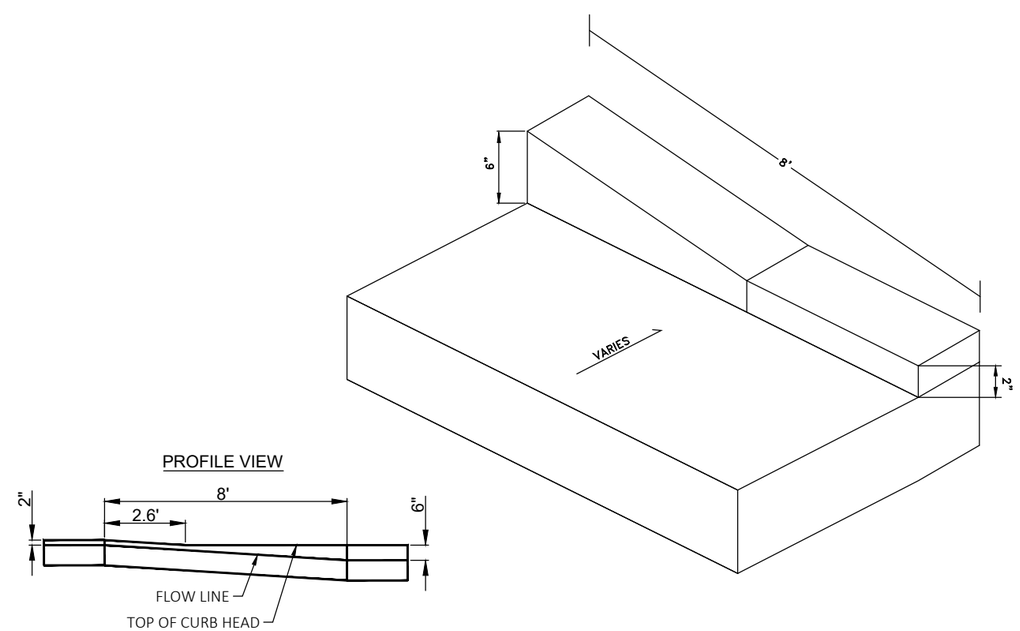

CURB & GUTTER TRANSITION
AT RAISED INTERSECTION
POTTER RD., EAST LEG

DATE	DESCRIPTION

CITY OF WAUWATOSA
ENGINEERING SERVICES DIVISION

CONSTRUCTION DETAILS

115TH STREET IMPROVEMENTS

CONTRACT:	23-07
FILE NO:	15-1075
DRAWN BY:	RPC
CHECKED BY:	JMS
SCALE:	NOT TO SCALE

D06

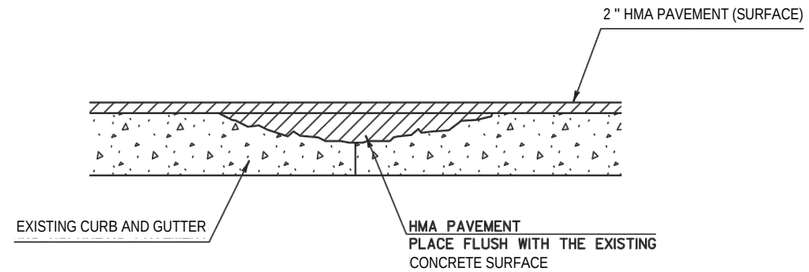

JOINT AND CRACK REPAIR DETAIL

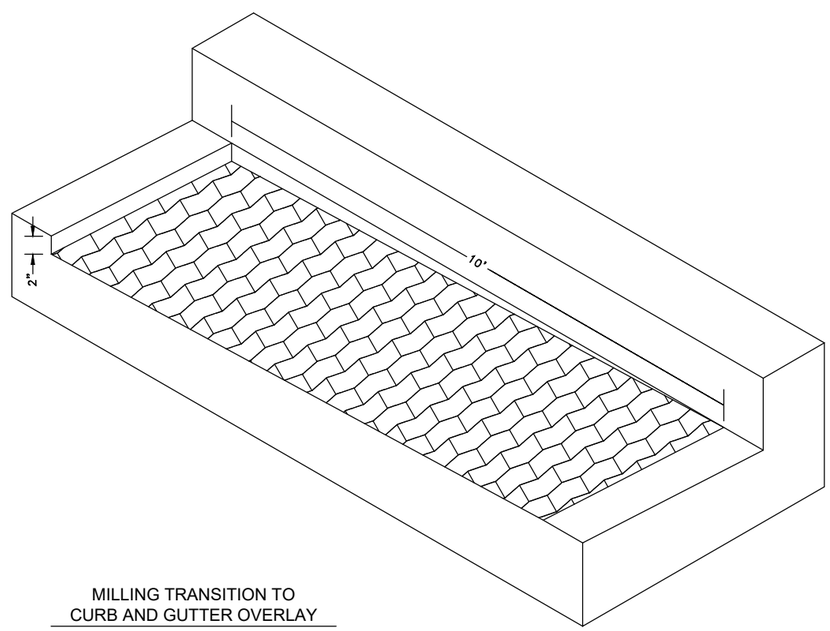

MILLING TRANSITION TO
CURB AND GUTTER OVERLAY

DATE	DESCRIPTION

CITY OF WAUWATOSA
ENGINEERING SERVICES DIVISION

CONSTRUCTION DETAILS

115TH STREET IMPROVEMENTS

CONTRACT:	23-07
FILE NO:	15-1075
DRAWN BY:	RPC
CHECKED BY:	JMS
SCALE:	NOT TO SCALE

D07

GENERAL NOTES

DETECTABLE WARNING FIELDS THAT ARE INSTALLED AS A GROUP OR SIDE BY SIDE, SHALL BE FROM THE SAME MANUFACTURER.

PLACE ALL DETECTABLE WARNING FIELD SYSTEMS IN ACCORDANCE TO THE MANUFACTURER'S RECOMMENDATION.

	MIN.	MAX.
A	1.6"	2.4"
B	0.65"	1.5"
C	*	*
D	0.9"	1.4"

* THE C DIMENSION IS 50% TO 65% OF THE D DIMENSION.

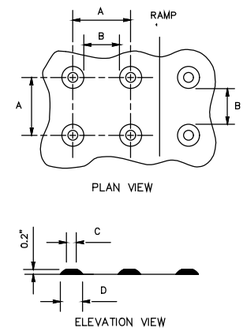

TRUNCATED DOMES

DETECTABLE WARNING PATTERN DETAIL

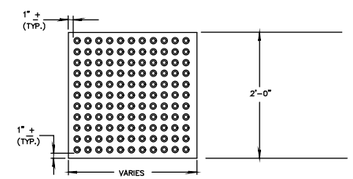

RECTANGULAR PLATES

DETECTABLE WARNING FIELDS

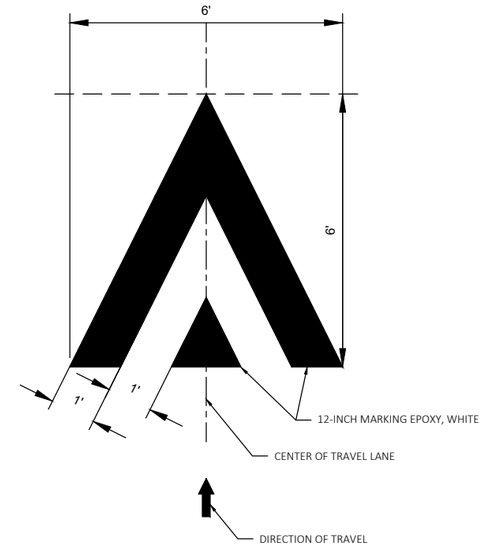

SPEED TABLE PAVEMENT MARKING DETAIL

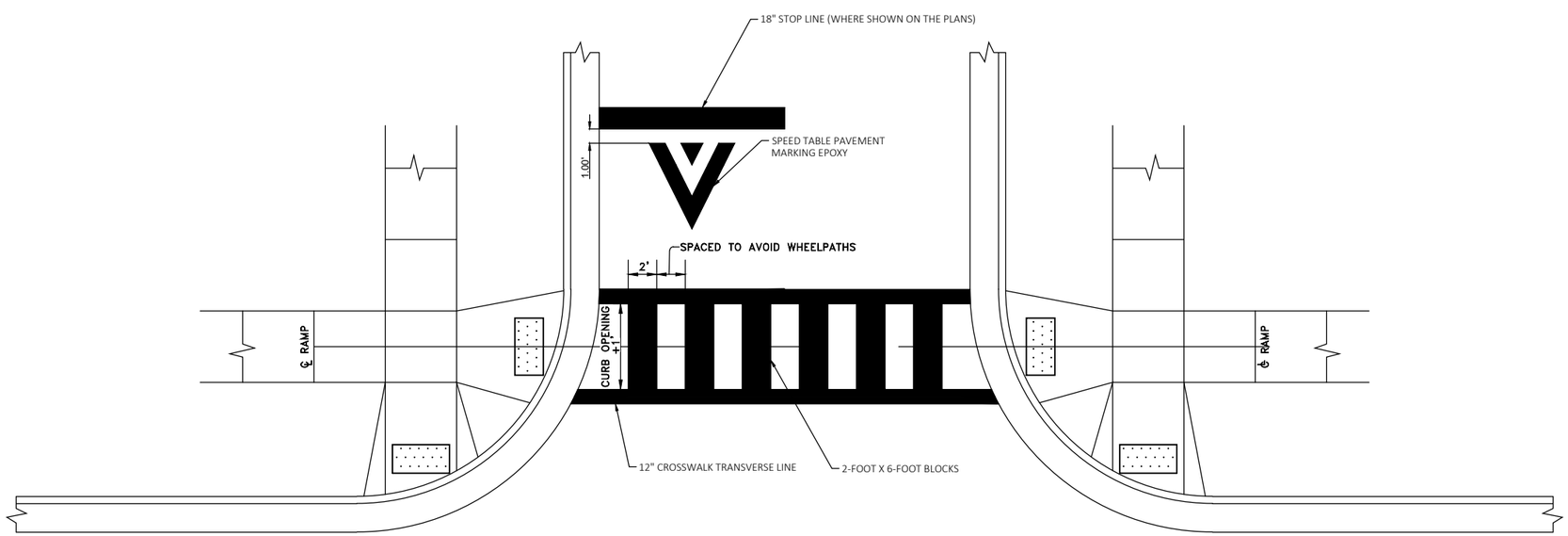

PAVEMENT MARKING
CROSSWALK
(NOT TO SCALE)

DATE	DESCRIPTION

CITY OF WAUWATOSA
ENGINEERING SERVICES DIVISION

CONSTRUCTION DETAILS

115TH STREET IMPROVEMENTS

CONTRACT: 23-07
FILE NO: 15-1075
DRAWN BY: RPC
CHECKED BY: JMS
SCALE: NOT TO SCALE

D08

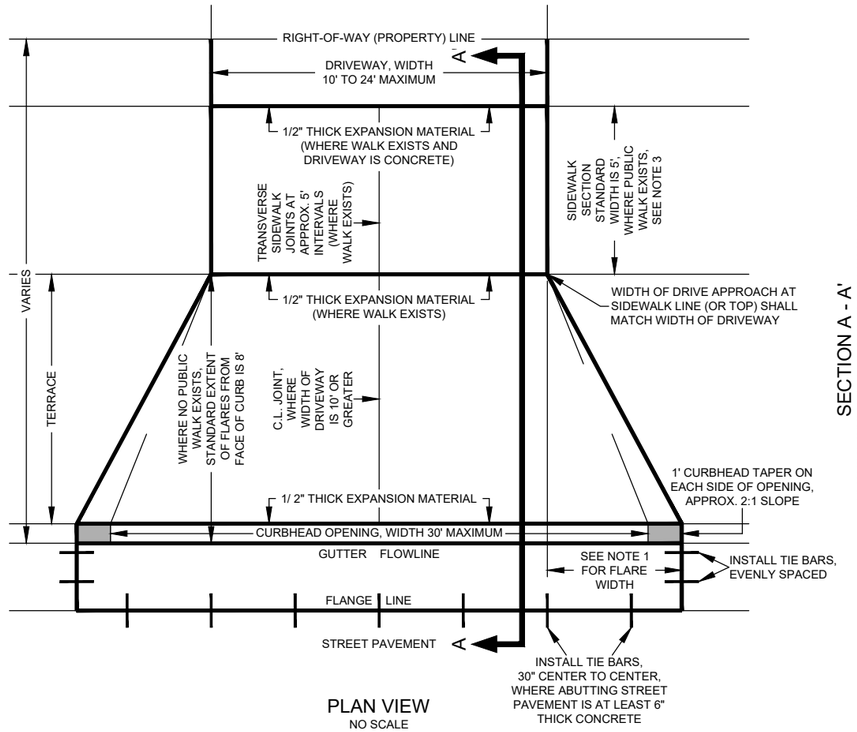

PLAN VIEW
NO SCALE

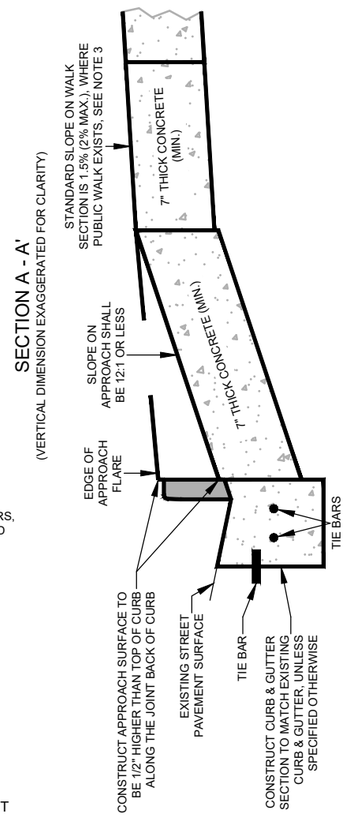

SECTION A - A'
(VERTICAL DIMENSION EXAGGERATED FOR CLARITY)

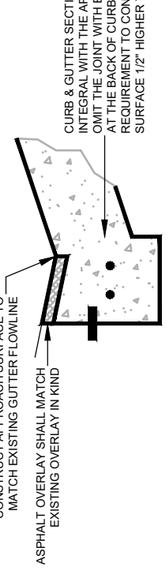

WHERE EXISTING GUTTER PAN HAS AN ASPHALT OVERLAY

NOTES:

1. FLARE WIDTH SHALL BE EITHER 4' OR EQUAL TO 1/2 THE EXTENT OF THE TERRACE (ROUNDED TO THE NEAREST FOOT), WHICHEVER IS LESS.
2. WHERE POSSIBLE, DRIVE APPROACHES SHALL BE CONSTRUCTED SO THAT 8" OF WATER DEPTH IN THE GUTTER FLOWLINE CANNOT LEAVE THE CITY PUBLIC RIGHT-OF-WAY. EXCEPTIONS MUST BE APPROVED IN WRITING BY THE ENGINEERING SERVICES.
3. SIDEWALK SECTION IS OPTIONAL WHERE NO PUBLIC SIDEWALK EXISTS. IF THE OPTIONAL SIDEWALK SECTION IS OMITTED THEN A STRAIGHT GRADE MAY BE BUILT FROM BACK OF CURB TO 15' BACK OF CURB FACE OR TO THE RIGHT-OF-WAY (PROPERTY) LINE, WHICHEVER IS LESS; SLOPE SHALL BE 12:1 OR LESS.

CITY OF WAUWATOSA DRIVE APPROACH DETAIL

DATE	DESCRIPTION

CITY OF WAUWATOSA
ENGINEERING SERVICES DIVISION

CONSTRUCTION DETAILS

115TH STREET IMPROVEMENTS

CONTRACT:	23-07
FILE NO:	15-1075
DRAWN BY:	RPC
CHECKED BY:	JMS
SCALE:	NOT TO SCALE

D09

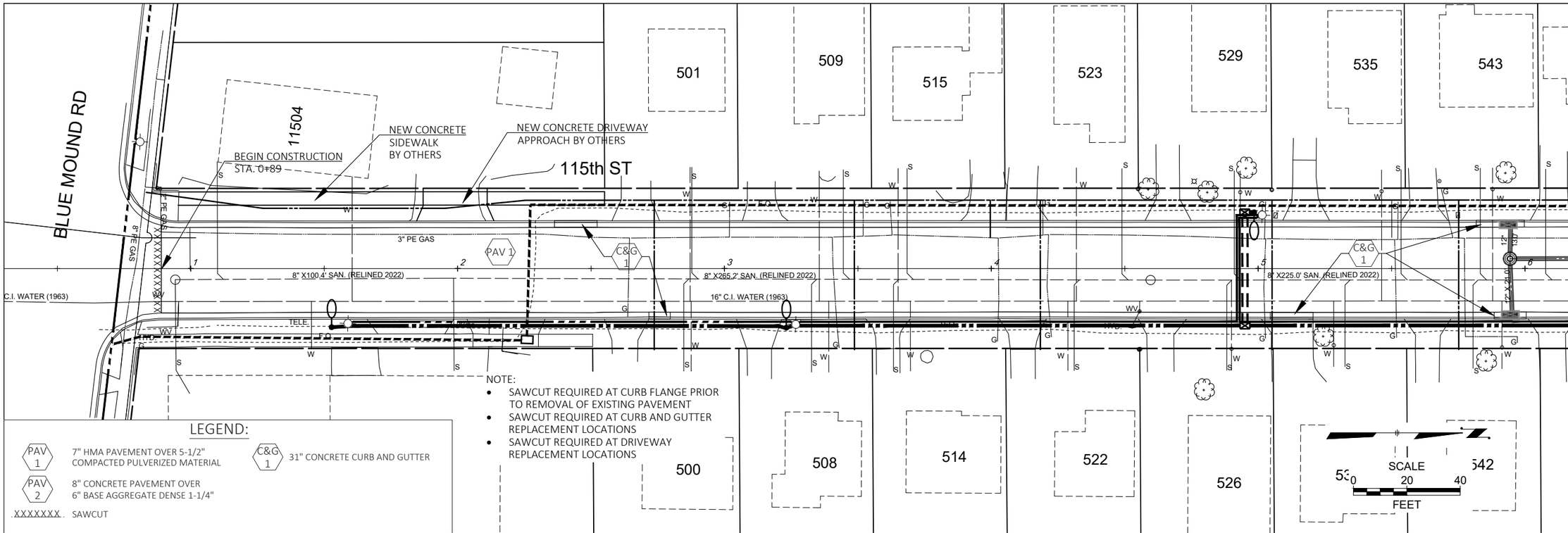

NOTE:

- SAWCUT REQUIRED AT CURB FLANGE PRIOR TO REMOVAL OF EXISTING PAVEMENT
- SAWCUT REQUIRED AT CURB AND GUTTER REPLACEMENT LOCATIONS
- SAWCUT REQUIRED AT DRIVEWAY REPLACEMENT LOCATIONS

LEGEND:

PAV 1	7" HMA PAVEMENT OVER 5-1/2" COMPACTED PULVERIZED MATERIAL
PAV 2	8" CONCRETE PAVEMENT OVER 6" BASE AGGREGATE DENSE 1-1/4"
XXXXXXX	SAWCUT
C&G 1	31" CONCRETE CURB AND GUTTER

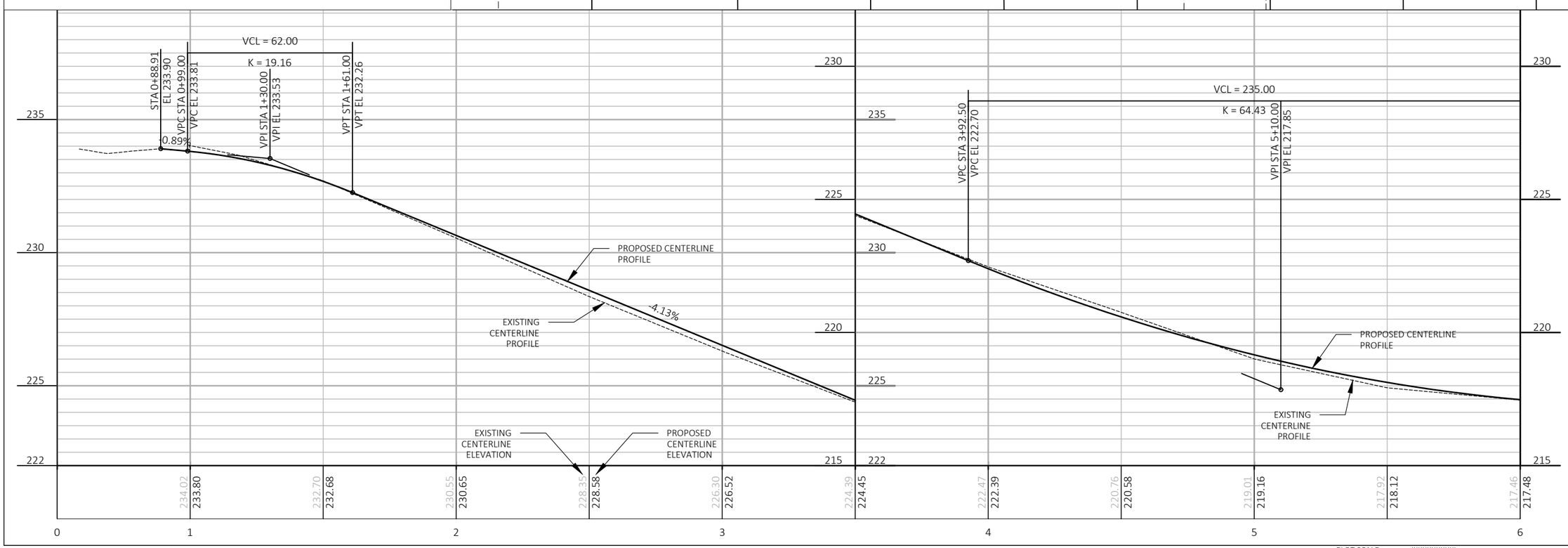

DESCRIPTION	DATE

CITY OF WAUWATOSA
ENGINEERING SERVICES DIVISION

TYPE D PAVING

N. 115TH ST.

FROM: W. BLUE MOUND RD.
TO: W. UNDERWOOD PKWY.

CONTRACT:	23-07
FILE NO:	15-1075
DRAWN BY:	RPC
CHECKED BY:	JMS
SCALE:	AS SHOWN

D10

FILE NAME : S:\DEPARTMENT FOLDERS\ENGINEERING\ACAD_PROJECTS\23-07 115TH STREET\SHEETSPLAN\05 PLAN AND PROFILE.DWG
LAYOUT NAME - 1
PLOT DATE : 4/12/2023 1:42 PM
PLOT BY : RYAN CHRISTENSEN
PLOT SCALE : ##########

535
543
601
609
11503
WISCONSIN AVE
11500
719
SCALE
0 20 40
FEET
C&G 1
MILLING TRANSITION TO CURB AND GUTTER OVERLAY STA 9+35 LT (SEE DETAIL)
MILLING DRIVEWAYS
ASPHALT DRIVEWAYS (REMOVE & REPLACE)
8" WATER (1963)
F.O.
3" PE GAS
4" PE GAS
12" X 265.0' STORM
15" X 141.0' STORM
15" X 217.0' STORM
8" X225.1' SAN. (RELINED 2022)
8" X244.5' SAN. (RELINED 2022)
16" C.I. WATER (1963)
PAV 1
7" CONCRETE SIDEWALK AND DRIVEWAY
115th ST
12" X 28.0' STORM
8" X160.9' SAN. (RELINED 2022)
HYD.
11425
11426
718

LEGEND:

- PAV 1 — 7" HMA PAVEMENT OVER 5-1/2" COMPACTED PULVERIZED MATERIAL
- PAV 2 — 8" CONCRETE PAVEMENT OVER 6" BASE AGGREGATE DENSE 1-1/4"
- XXXXXXX — SAWCUT
- C&G 1 — 31" CONCRETE CURB AND GUTTER

NOTE:

- SAWCUT REQUIRED AT CURB FLANGE PRIOR TO REMOVAL OF EXISTING PAVEMENT
- SAWCUT REQUIRED AT CURB AND GUTTER REPLACEMENT LOCATIONS
- SAWCUT REQUIRED AT DRIVEWAY REPLACEMENT LOCATIONS

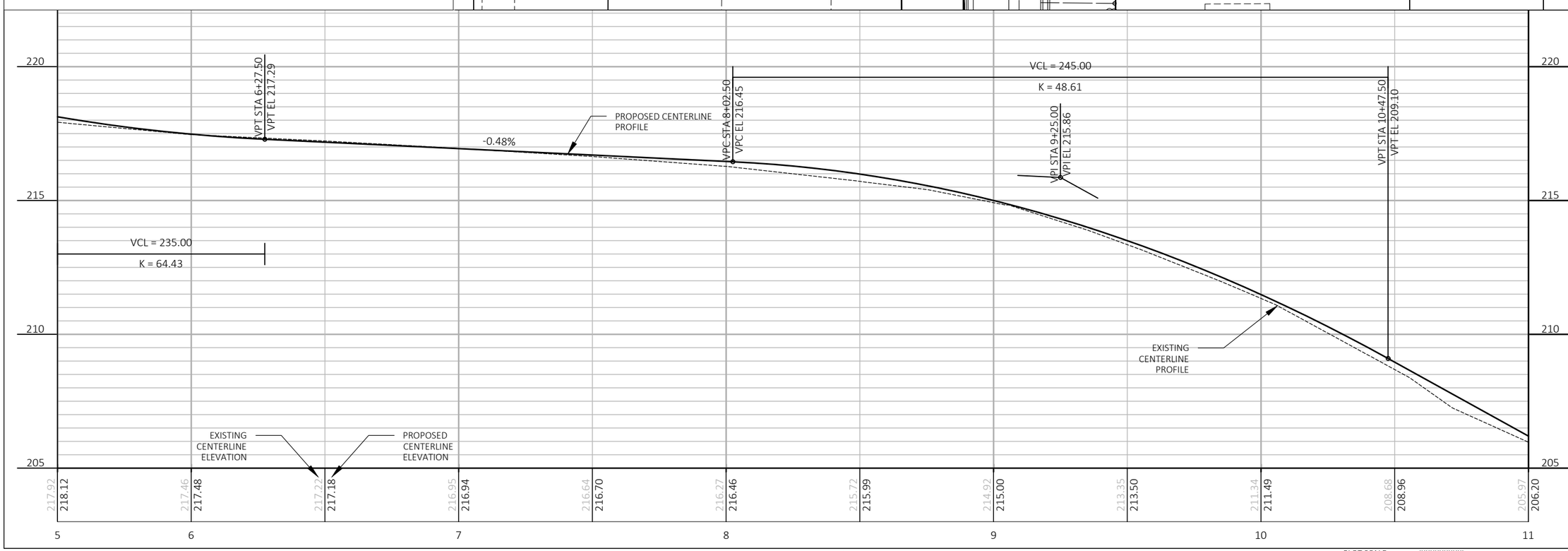

DESCRIPTION
DATE

CITY OF WAUWATOSA
ENGINEERING SERVICES DIVISION

TYPE D PAVING

N. 115TH ST.

FROM: W. BLUE MOUND RD.
TO: W. UNDERWOOD PKWY.

CONTRACT: 23-07
FILE NO: 15-1075
DRAWN BY: RPC
CHECKED BY: JMS
SCALE: AS SHOWN

D11

FILE NAME : S:\DEPARTMENT FOLDERS\ENGINEERING\ACAD_PROJECTS\23-07 115TH STREET\SHEETSPLAN\05 PLAN AND PROFILE.DWG
LAYOUT NAME - 2
PLOT DATE : 4/12/2023 1:42 PM
PLOT BY : RYAN CHRISTENSEN
PLOT SCALE : ##########

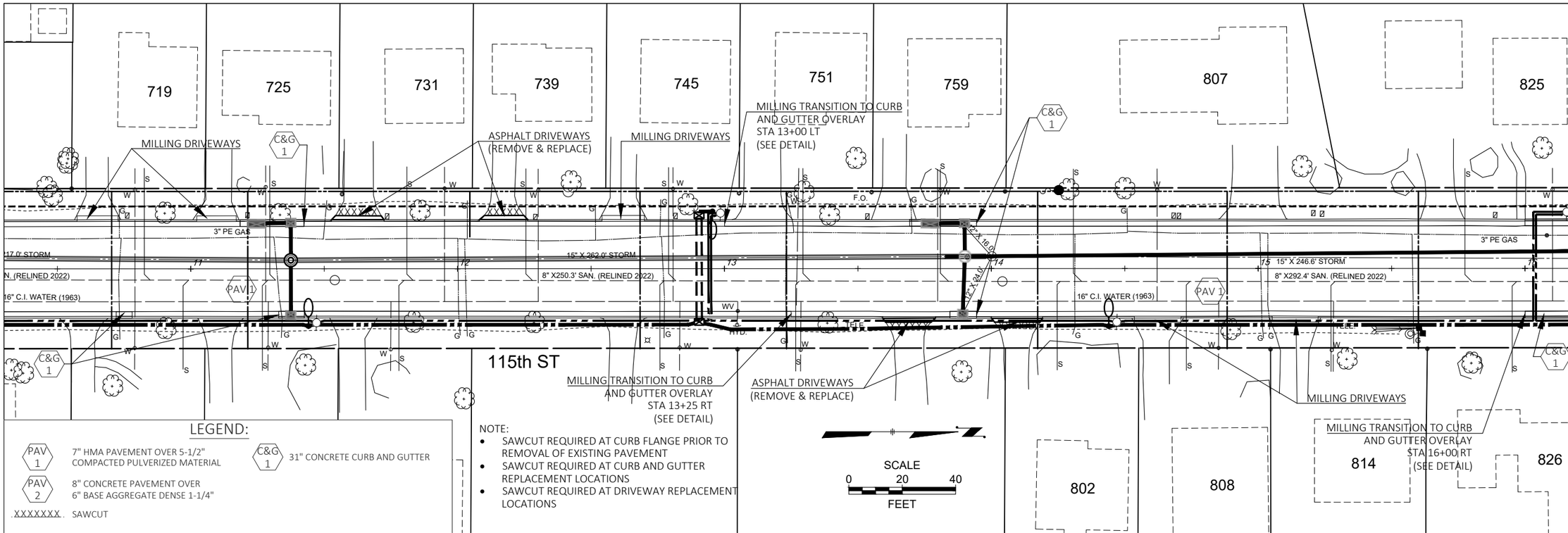

LEGEND:

- PAV 1 — 7" HMA PAVEMENT OVER 5-1/2" COMPACTED PULVERIZED MATERIAL
- PAV 2 — 8" CONCRETE PAVEMENT OVER 6" BASE AGGREGATE DENSE 1-1/4"
- XXXXXXX — SAWCUT
- C&G 1 — 31" CONCRETE CURB AND GUTTER

NOTE:

- SAWCUT REQUIRED AT CURB FLANGE PRIOR TO REMOVAL OF EXISTING PAVEMENT
- SAWCUT REQUIRED AT CURB AND GUTTER REPLACEMENT LOCATIONS
- SAWCUT REQUIRED AT DRIVEWAY REPLACEMENT LOCATIONS

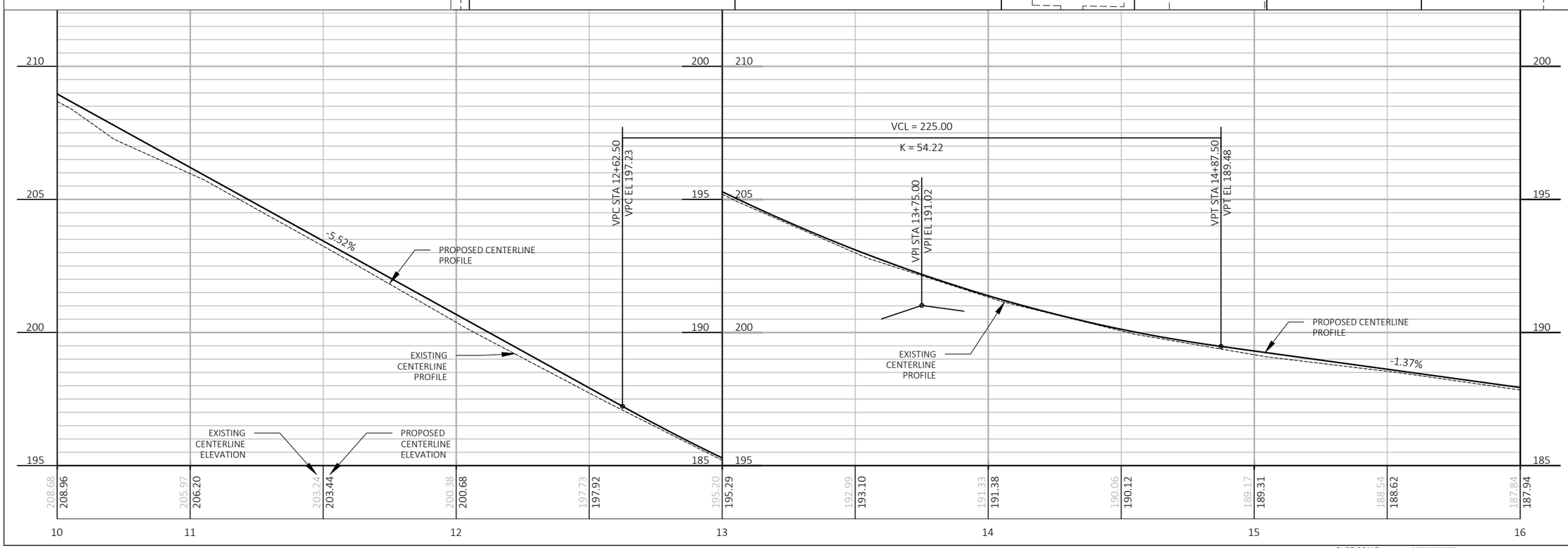

DESCRIPTION	DATE

CITY OF WAUWATOSA
ENGINEERING SERVICES DIVISION

TYPE D PAVING

N. 115TH ST.

FROM: W. BLUE MOUND RD.
TO: W. UNDERWOOD PKWY.

CONTRACT:	23-07
FILE NO:	15-1075
DRAWN BY:	RPC
CHECKED BY:	JMS
SCALE:	AS SHOWN

D12

FILE NAME : S:\DEPARTMENT FOLDERS\ENGINEERING\ACAD_PROJECTS\23-07 115TH STREET\SHEETSPLAN\05 PLAN AND PROFILE.DWG
LAYOUT NAME - 3

PLOT DATE : 4/12/2023 1:42 PM PLOT BY : RYAN CHRISTENSEN PLOT SCALE : ##########

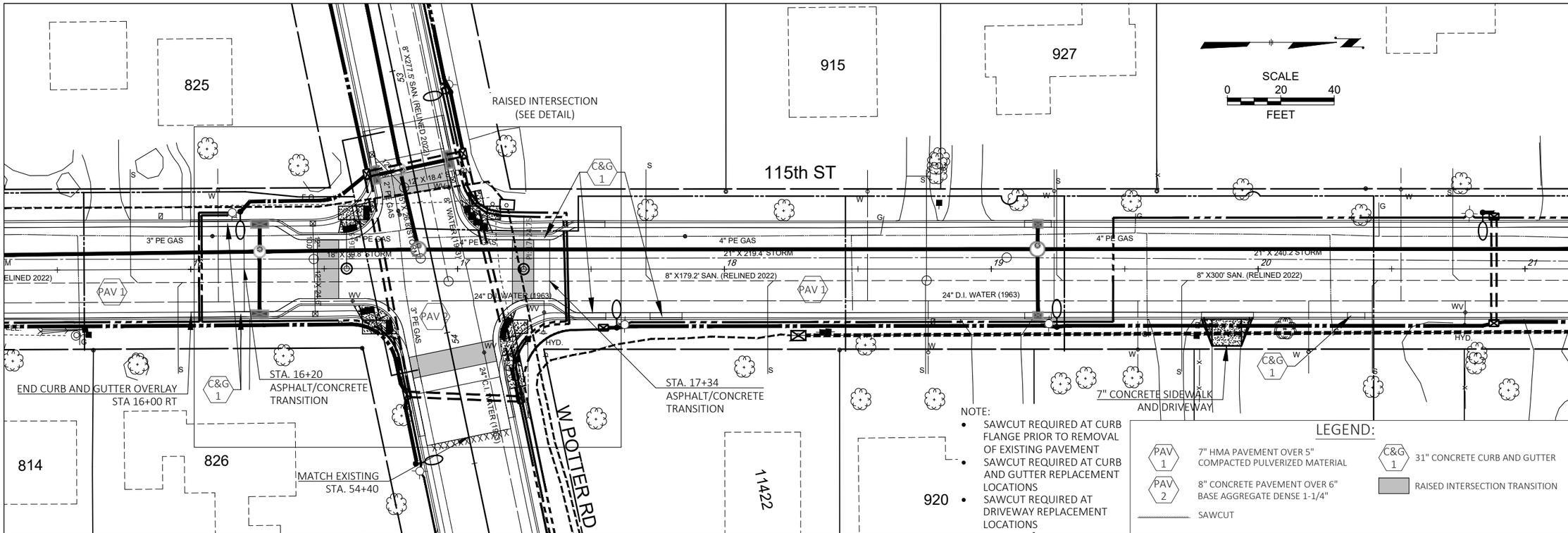

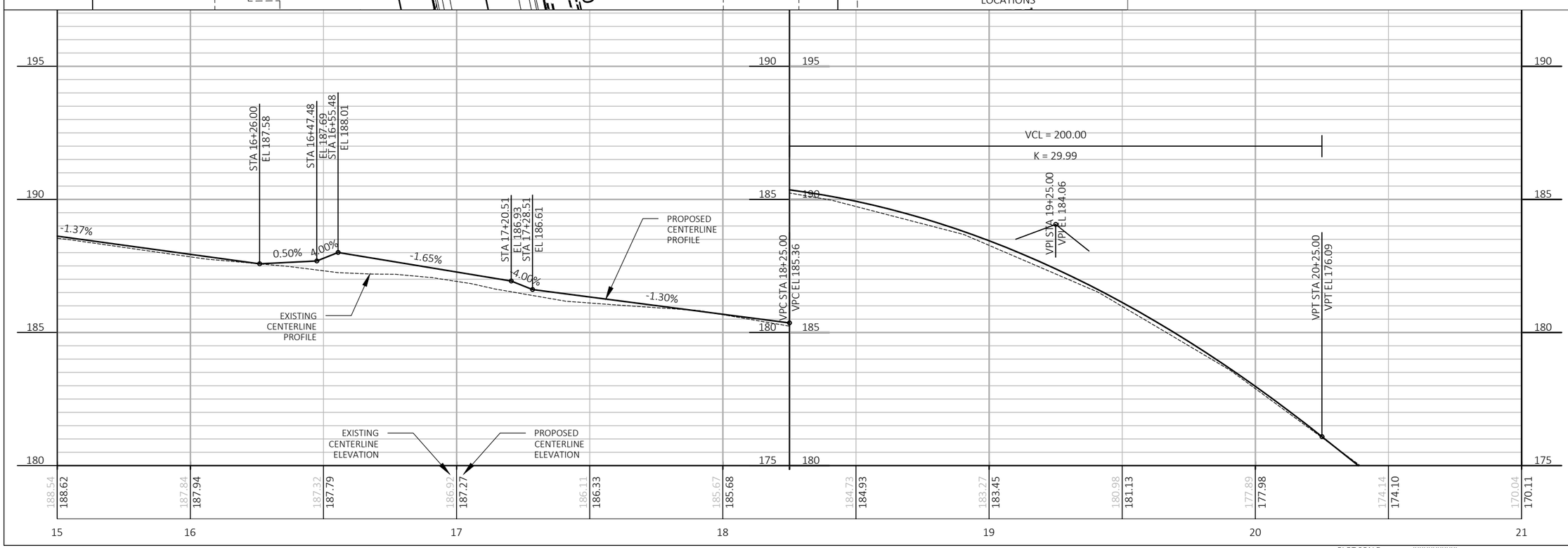

DESCRIPTION

DATE

CITY OF WAUWATOSA
ENGINEERING SERVICES DIVISION

TYPE D PAVING

N. 115TH ST.

FROM: W. BLUE MOUND RD.

TO: W. UNDERWOOD PKWY.

CONTRACT:	23-07
FILE NO:	15-1075
DRAWN BY:	RPC
CHECKED BY:	JMS
SCALE:	AS SHOWN

D13

FILE NAME : S:\DEPARTMENT FOLDERS\ENGINEERING\ACAD_PROJECTS\23-07 115TH STREET\SHEETSPLAN\05 PLAN AND PROFILE.DWG
LAYOUT NAME - 4

PLOT DATE : 4/12/2023 1:43 PM

PLOT BY : RYAN CHRISTENSEN

PLOT SCALE : ##########

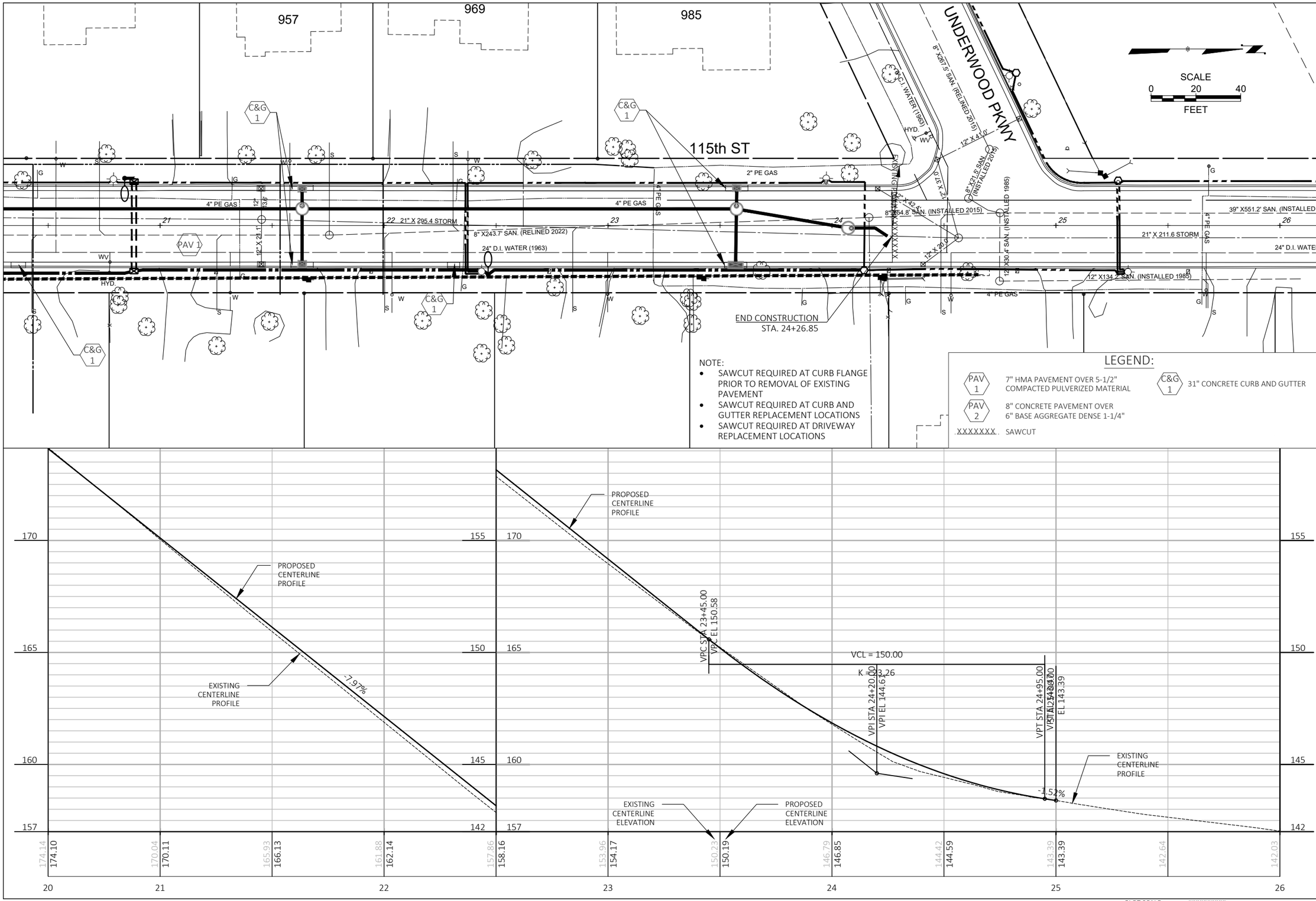

DESCRIPTION

DATE

CITY OF WAUWATOSA
ENGINEERING SERVICES DIVISION

TYPE D PAVING

N. 115TH ST.

TO: W. UNDERWOOD PKWY.

FROM: W. BLUE MOUND RD.

CONTRACT:	23-07
FILE NO:	15-1075
DRAWN BY:	RPC
CHECKED BY:	JMS
SCALE:	AS SHOWN

D14

FILE NAME : S:\DEPARTMENT FOLDERS\ENGINEERING\ACAD_PROJECTS\23-07 115TH STREET\SHEETSPLAN\05 PLAN AND PROFILE.DWG
LAYOUT NAME - 5

PLOT DATE : 4/12/2023 1:43 PM

PLOT BY : RYAN CHRISTENSEN

PLOT SCALE : ##########

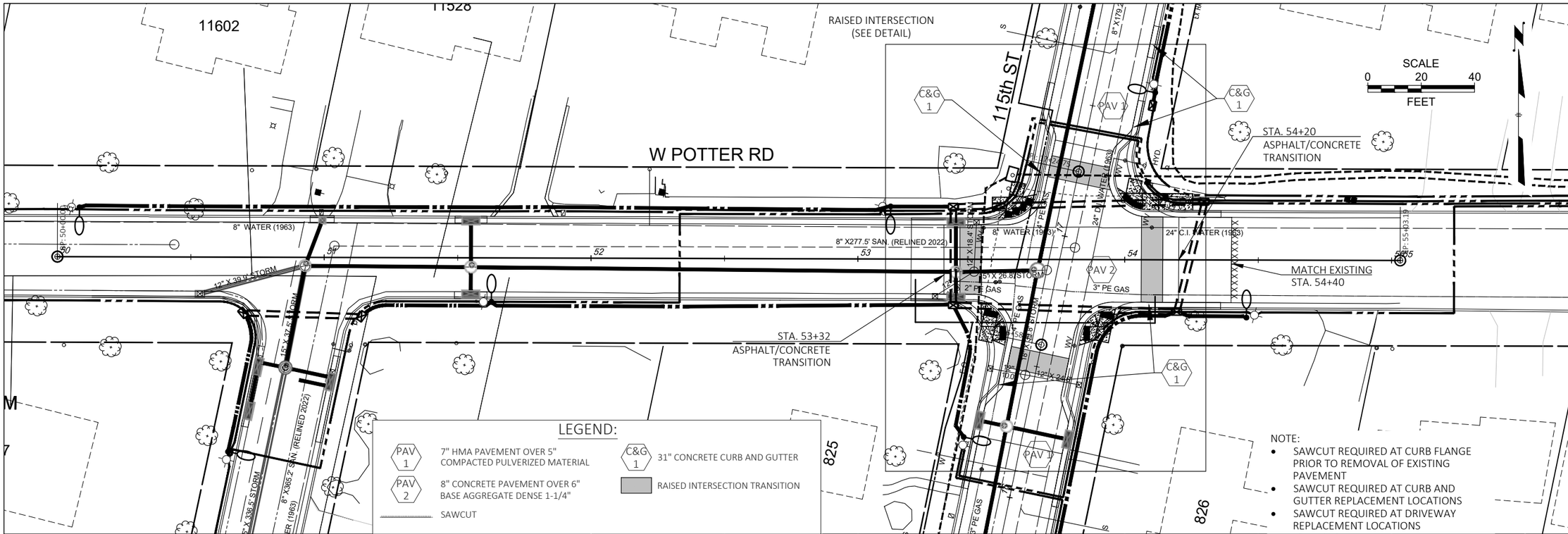

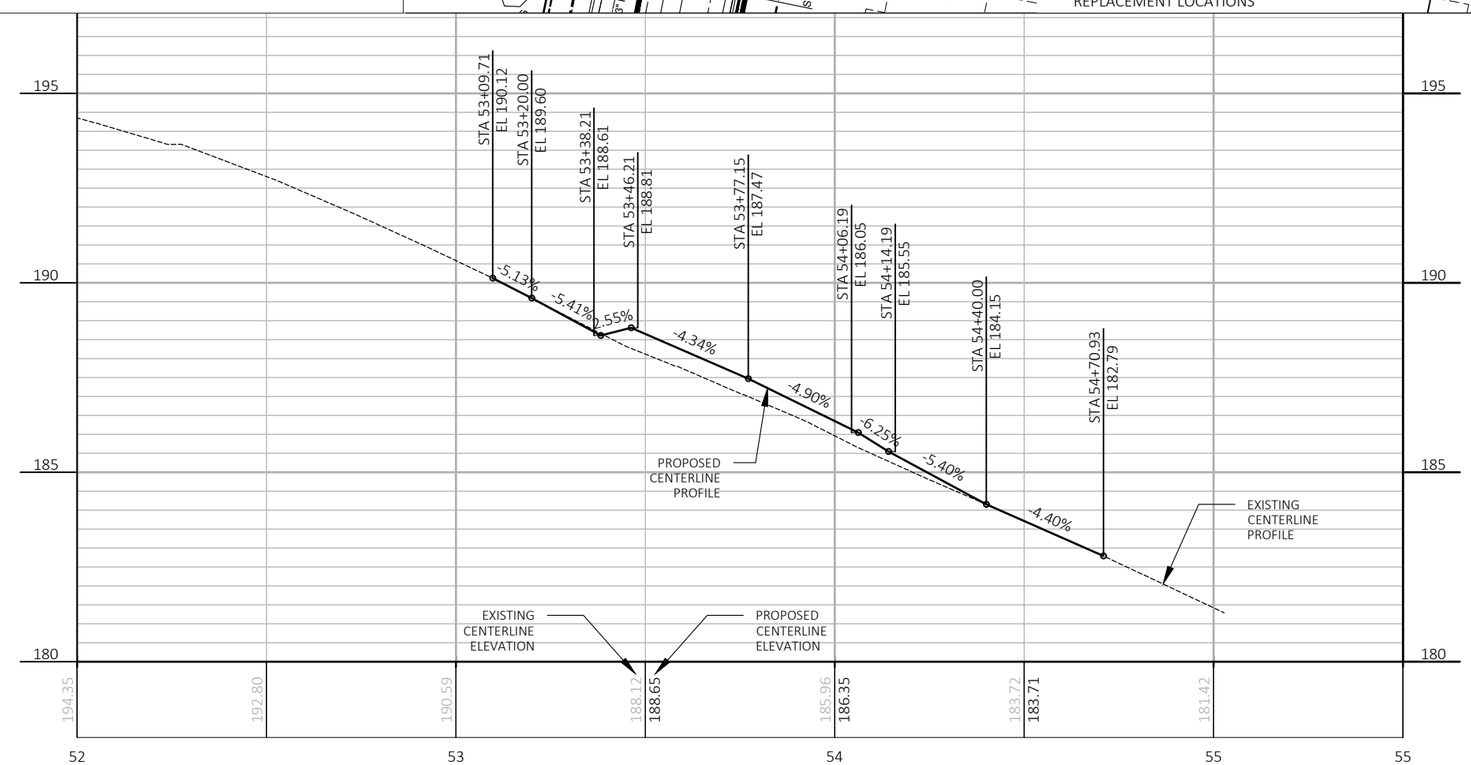

DESCRIPTION

DATE

CITY OF WAUWATOSA
ENGINEERING SERVICES DIVISION

TYPE D PAVING

W. POTTER RD.

FROM: N. 116TH ST.

TO: N. 115TH ST.

CONTRACT: 23-07
FILE NO: 15-1075
DRAWN BY: RPC
CHECKED BY: JMS
SCALE: AS SHOWN

D15

FILE NAME : S:\DEPARTMENT FOLDERS\ENGINEERING\ACAD_PROJECTS\23-07 115TH STREET\SHEETSPLAN\05 PLAN AND PROFILE.DWG
LAYOUT NAME - POTTER

PLOT DATE : 4/12/2023 1:43 PM

PLOT BY : RYAN CHRISTENSEN

PLOT SCALE : ##########

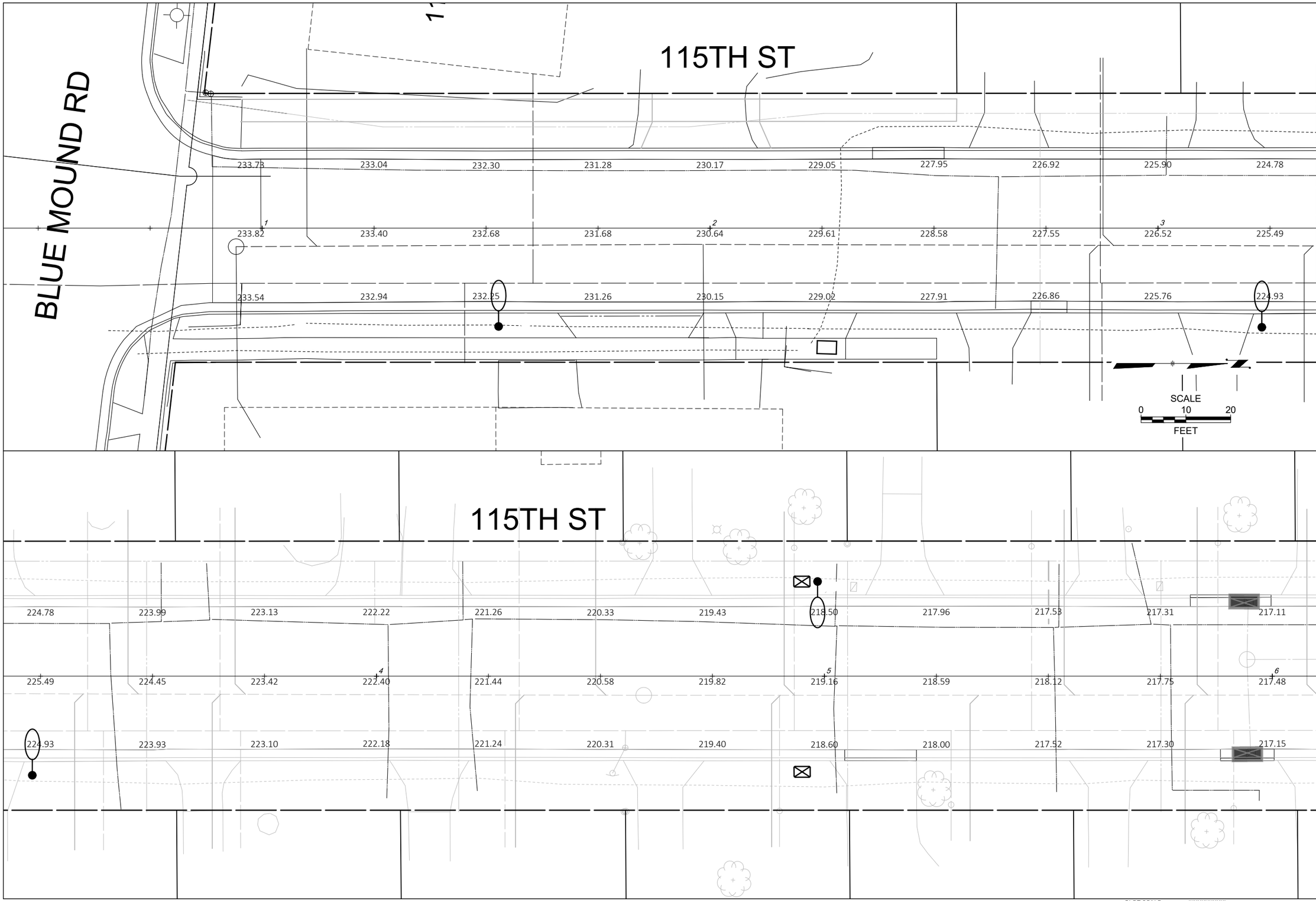

DATE	DESCRIPTION

CITY OF WAUWATOSA
ENGINEERING SERVICES DIVISION

PAVEMENT GRADES

N. 115TH ST.

FROM: W. BLUE MOUND RD.
TO: W. UNDERWOOD PKWY.

CONTRACT: 23-07
FILE NO: 15-1075
DRAWN BY: RPC
CHECKED BY: JMS
SCALE: AS SHOWN

D16

FILE NAME : S:\DEPARTMENT FOLDERS\ENGINEERING\ACAD_PROJECTS\23-07 115TH STREET\SHEETSPLAN\06 PAVEMENT GRADES.DWG
LAYOUT NAME - 1
PLOT DATE : 4/12/2023 1:16 PM
PLOT BY : RYAN CHRISTENSEN
PLOT SCALE : ##########

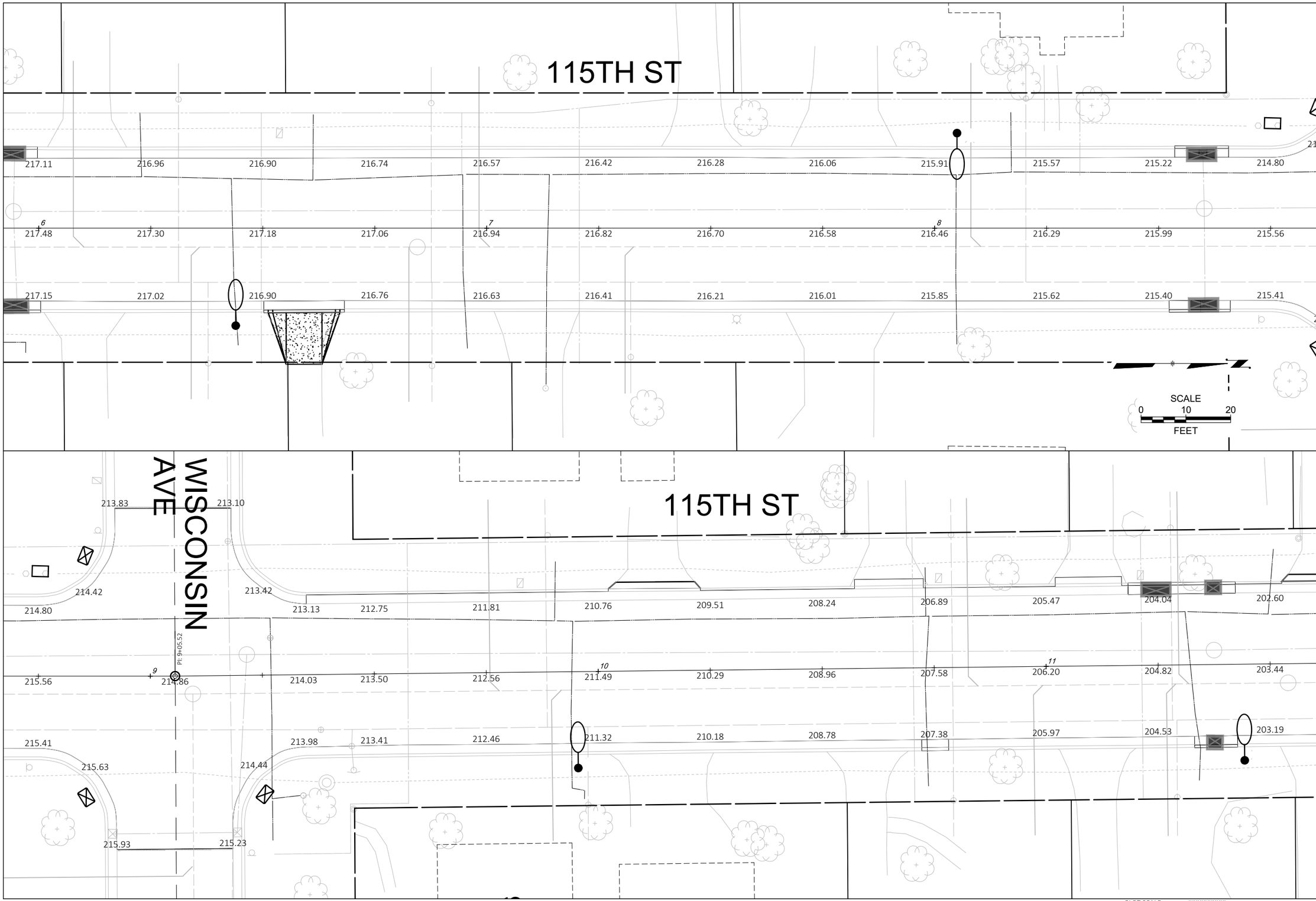

DESCRIPTION

DATE

CITY OF WAUWATOSA

ENGINEERING SERVICES DIVISION

PAVEMENT GRADES

N. 115TH ST.

TO: W. UNDERWOOD PKWY.

FROM: W. BLUE MOUND RD.

CONTRACT:	23-07
FILE NO:	15-1075
DRAWN BY:	RPC
CHECKED BY:	JMS
SCALE:	AS SHOWN

D17

FILE NAME : S:\DEPARTMENT FOLDERS\ENGINEERING\ACAD_PROJECTS\23-07 115TH STREET\SHEETSPLAN\06 PAVEMENT GRADES.DWG
LAYOUT NAME - 2

PLOT DATE : 4/12/2023 1:16 PM

PLOT BY : RYAN CHRISTENSEN

PLOT SCALE : ###########

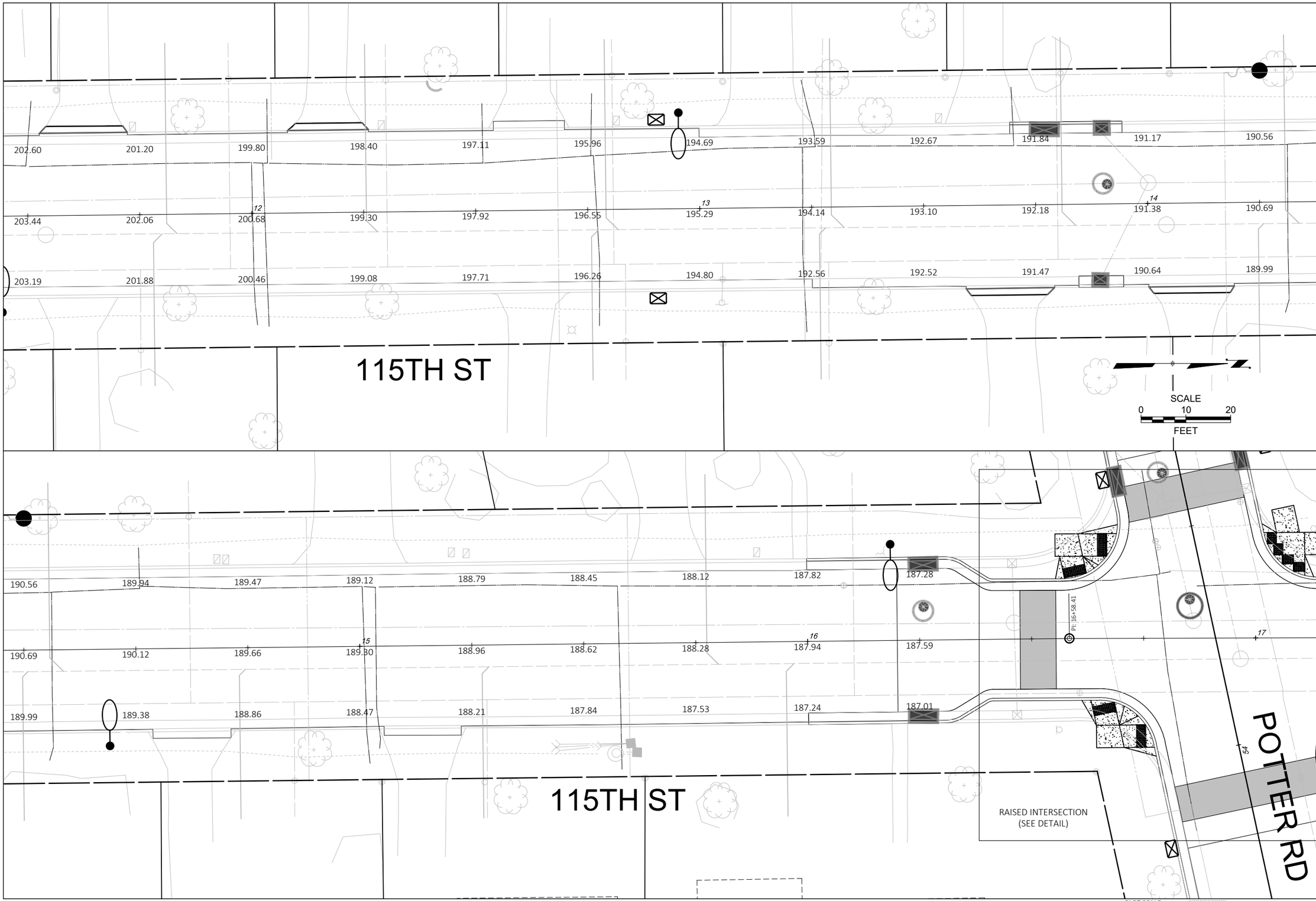

DATE	DESCRIPTION

CITY OF WAUWATOSA
ENGINEERING SERVICES DIVISION

PAVEMENT GRADES

N. 115TH ST.

FROM: W. BLUE MOUND RD.
TO: W. UNDERWOOD PKWY.

CONTRACT: 23-07
FILE NO: 15-1075
DRAWN BY: RPC
CHECKED BY: JMS
SCALE: AS SHOWN

D18

FILE NAME : S:\DEPARTMENT FOLDERS\ENGINEERING\ACAD_PROJECTS\23-07 115TH STREET\SHEETSPLAN\06 PAVEMENT GRADES.DWG
LAYOUT NAME - 3
PLOT DATE : 4/12/2023 1:17 PM
PLOT BY : RYAN CHRISTENSEN
PLOT SCALE : ##########

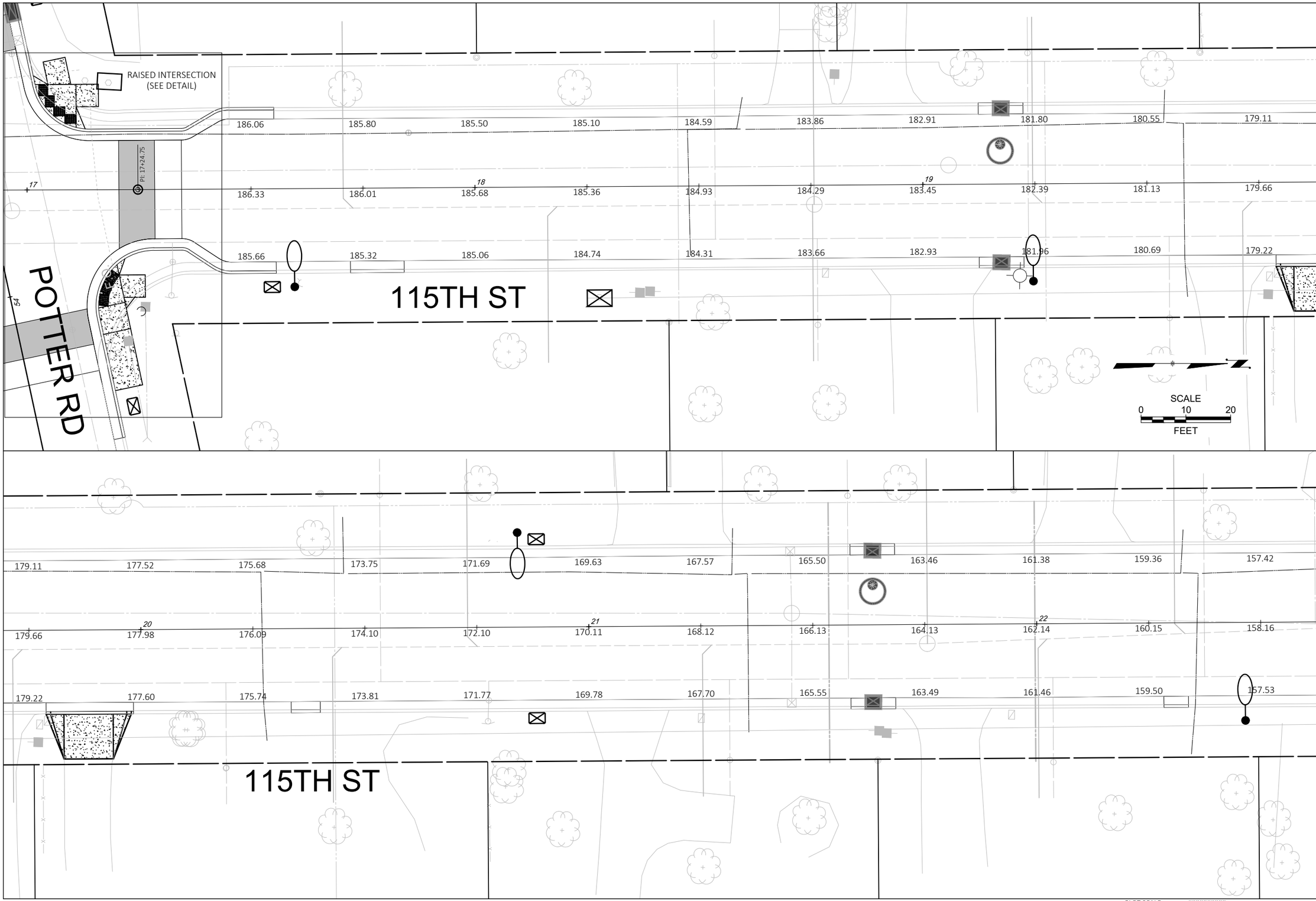

DESCRIPTION

DATE

CITY OF WAUWATOSA

ENGINEERING SERVICES DIVISION

PAVEMENT GRADES

N. 115TH ST.

FROM: W. BLUE MOUND RD.

TO: W. UNDERWOOD PKWY.

CONTRACT: 23-07

FILE NO: 15-1075

DRAWN BY: RPC

CHECKED BY: JMS

SCALE: AS SHOWN

D19

FILE NAME : S:\DEPARTMENT FOLDERS\ENGINEERING\ACAD_PROJECTS\23-07 115TH STREET\SHEETSPLAN\06 PAVEMENT GRADES.DWG
LAYOUT NAME - 4

PLOT DATE : 4/12/2023 1:17 PM

PLOT BY : RYAN CHRISTENSEN

PLOT SCALE : ##########

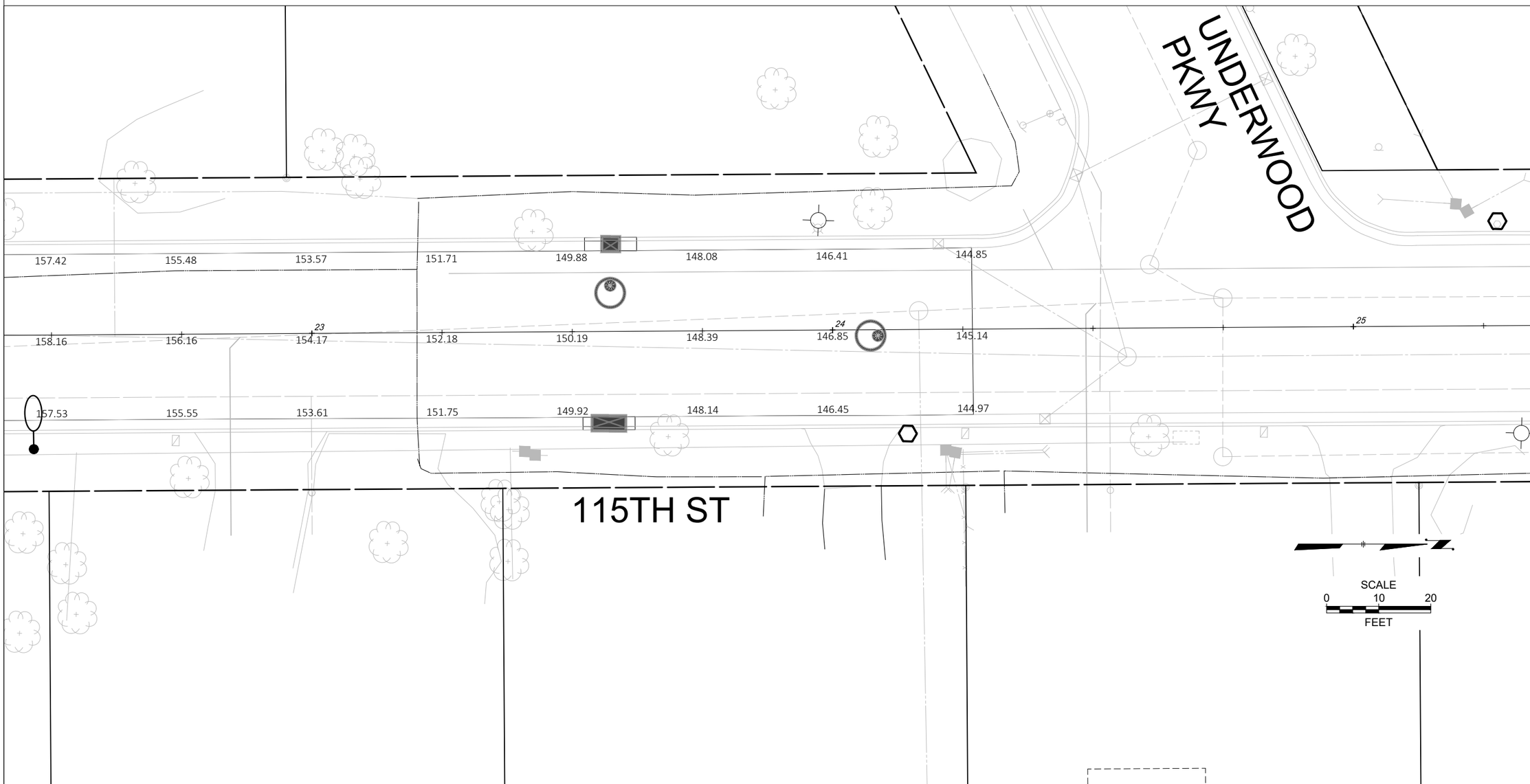

DATE	DESCRIPTION

CITY OF WAUWATOSA
ENGINEERING SERVICES DIVISION

PAVEMENT GRADES

N. 115TH ST.

FROM: W. BLUE MOUND RD.
TO: W. UNDERWOOD PKWY.

CONTRACT:	23-07
FILE NO:	15-1075
DRAWN BY:	RPC
CHECKED BY:	JMS
SCALE:	AS SHOWN

D20

FILE NAME : S:\DEPARTMENT FOLDERS\ENGINEERING\ACAD_PROJECTS\23-07 115TH STREET\SHEETSPLAN\06 PAVEMENT GRADES.DWG
LAYOUT NAME - 5

PLOT DATE : 4/12/2023 1:18 PM

PLOT BY : RYAN CHRISTENSEN

PLOT SCALE : ###########

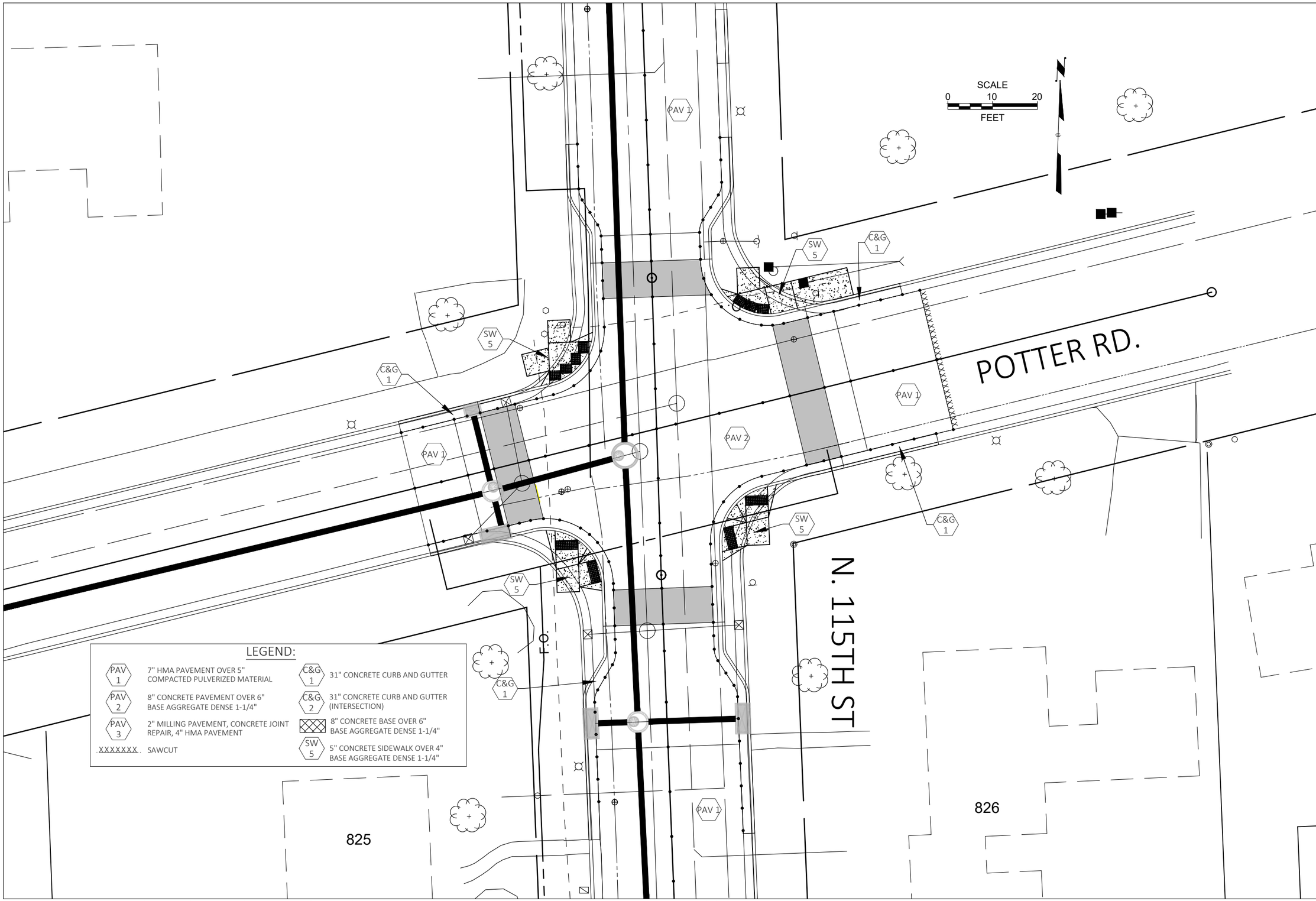

DATE	DESCRIPTION

CITY OF WAUWATOSA
ENGINEERING SERVICES DIVISION

INTERSECTION DETAILS

N. 115TH ST.
W. POTTER RD.

CONTRACT: 23-07
FILE NO: 15-1075
DRAWN BY: RPC
CHECKED BY: JMS
SCALE: AS SHOWN

D21

FILE NAME : S:\DEPARTMENT FOLDERS\ENGINEERING\ACAD_PROJECTS\23-07 115TH STREET\SHEETSPLAN\07 INTERSECTION DETAILS.DWG
LAYOUT NAME - Intersection
PLOT DATE : 4/12/2023 12:34 PM
PLOT BY : RYAN CHRISTENSEN

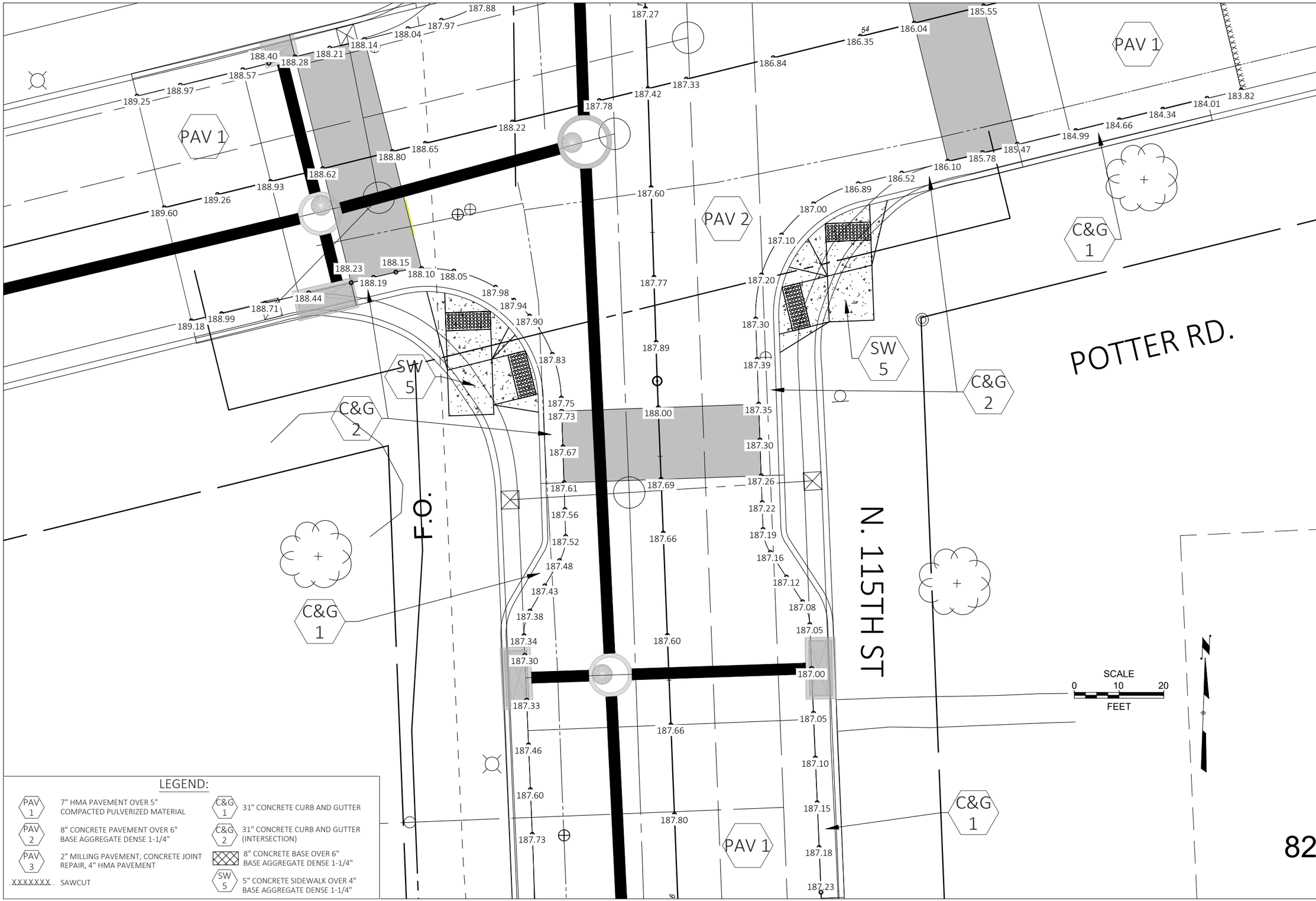

DESCRIPTION

DATE

CITY OF WAUWATOSA
ENGINEERING SERVICES DIVISION

INTERSECTION DETAILS/PAVING GRADES

N. 115TH ST.

W. POTTER RD.

CONTRACT:	23-07
FILE NO:	15-1075
DRAWN BY:	RPC
CHECKED BY:	JMS
SCALE:	AS SHOWN

D22

826

FILE NAME : S:\DEPARTMENT FOLDERS\ENGINEERING\ACAD_PROJECTS\23-07 115TH STREET\SHEETSPLAN\07 INTERSECTION DETAILS.DWG

LAYOUT NAME - Intersection DETAIL S

PLOT DATE : 4/12/2023 12:35 PM

PLOT BY : RYAN CHRISTENSEN

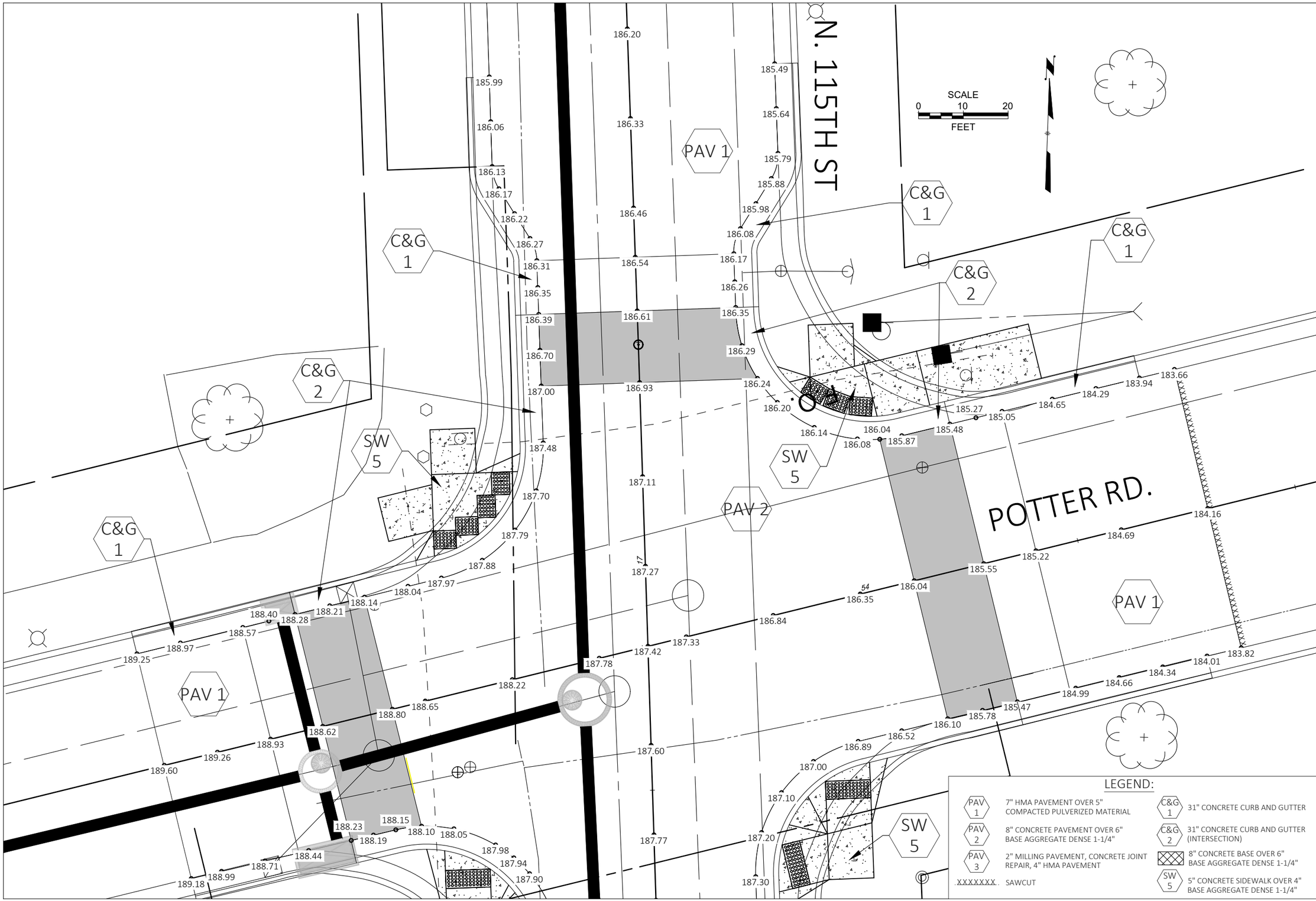

LEGEND:

PAV 1	7" HMA PAVEMENT OVER 5" COMPACTED PULVERIZED MATERIAL
PAV 2	8" CONCRETE PAVEMENT OVER 6" BASE AGGREGATE DENSE 1-1/4"
PAV 3	2" MILLING PAVEMENT, CONCRETE JOINT REPAIR, 4" HMA PAVEMENT
XXXXXXX	SAWCUT
C&G 1	31" CONCRETE CURB AND GUTTER
C&G 2	31" CONCRETE CURB AND GUTTER (INTERSECTION)
	8" CONCRETE BASE OVER 6" BASE AGGREGATE DENSE 1-1/4"
SW 5	5" CONCRETE SIDEWALK OVER 4" BASE AGGREGATE DENSE 1-1/4"

DATE	DESCRIPTION

CITY OF WAUWATOSA
ENGINEERING SERVICES DIVISION

INTERSECTION DETAILS/PAVING GRADES

N. 115TH ST.

W. POTTER RD.

CONTRACT: 23-07
FILE NO.: 15-1075
DRAWN BY: RPC
CHECKED BY: JMS
SCALE: AS SHOWN

D23

FILE NAME : S:\DEPARTMENT FOLDERS\ENGINEERING\ACAD_PROJECTS\23-07 115TH STREET\SHEETSPLAN\07 INTERSECTION DETAILS.DWG
LAYOUT NAME - Intersection DETAIL N

PLOT DATE : 4/12/2023 12:35 PM PLOT BY : RYAN CHRISTENSEN

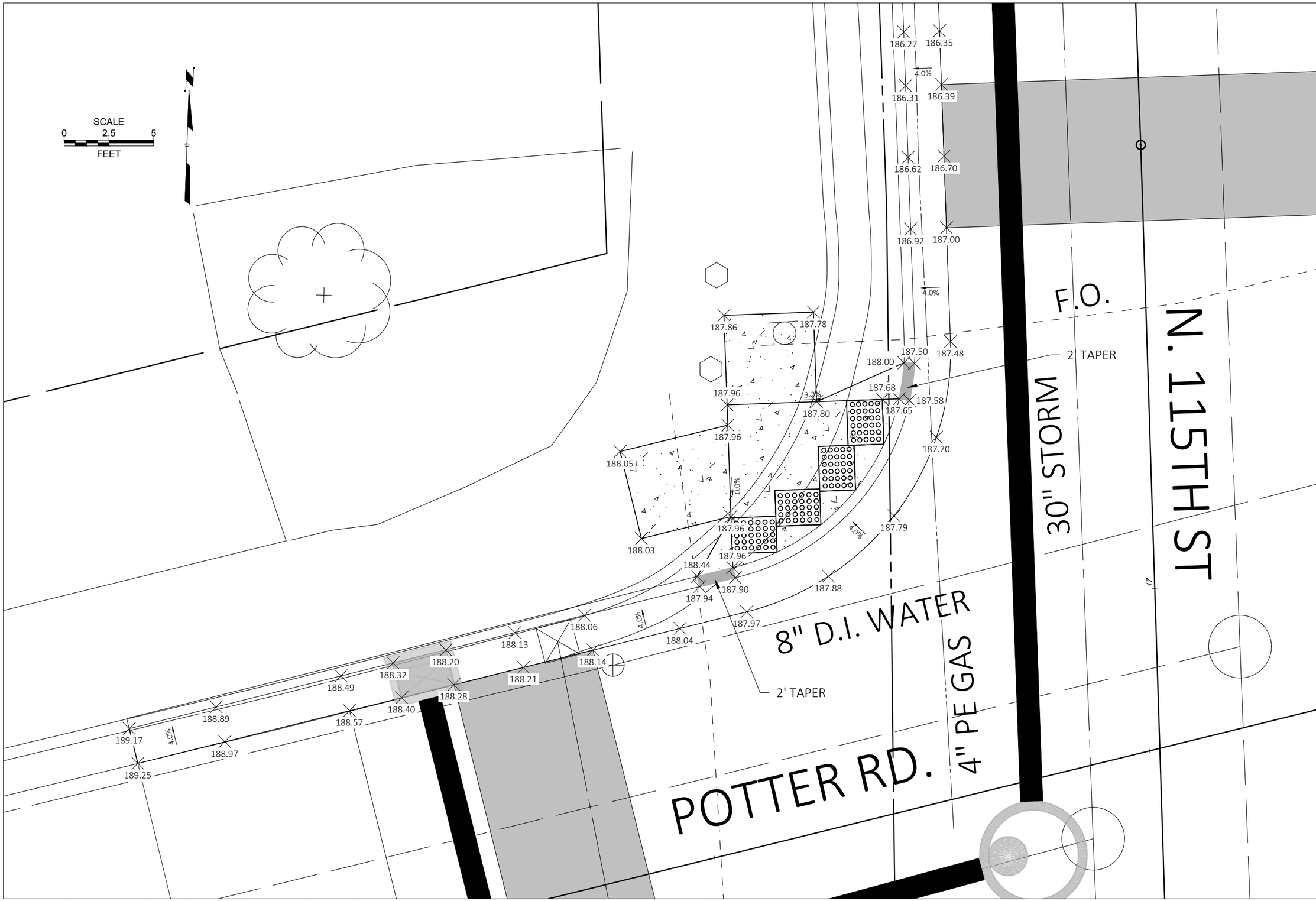

DESCRIPTION

DATE

CITY OF WAUWATOSA
ENGINEERING SERVICES DIVISION

CURB RAMP DETAILS

POTTER RD. & N. 115TH ST.

N.W. QUADRANT

CONTRACT:	23-07
FILE NO:	15-1075
DRAWN BY:	RPC
CHECKED BY:	JMS
SCALE:	AS SHOWN

D24

FILE NAME : S:\DEPARTMENT FOLDERS\ENGINEERING\ACAD_PROJECTS\23-07 115TH STREET\SHEETSPLAN\08 CURB RAMP DETAILS.DWG

LAYOUT NAME - Potter NW

PLOT DATE : 4/12/2023 1:36 PM

PLOT BY : RYAN CHRISTENSEN

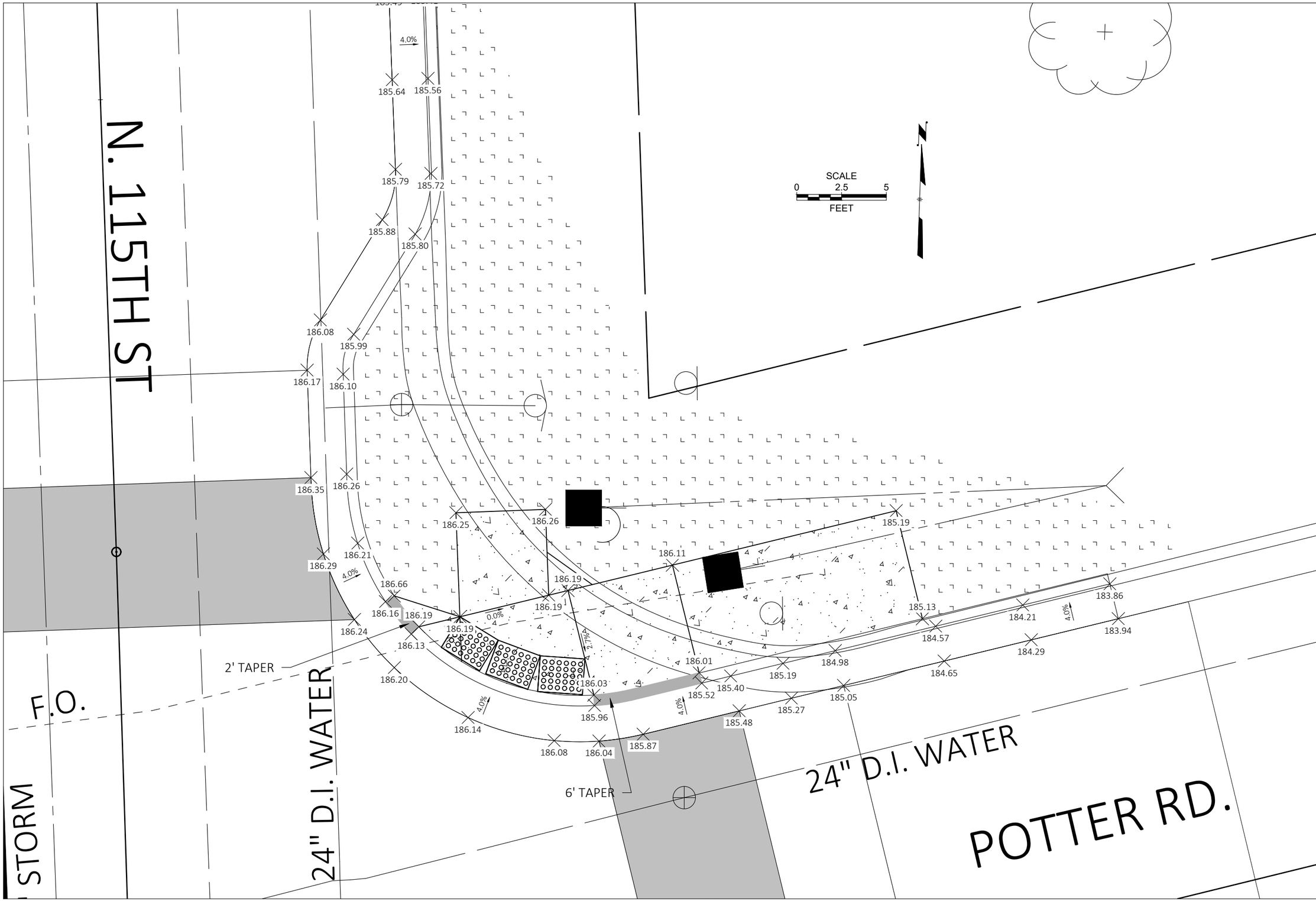

DATE	DESCRIPTION

CITY OF WAUWATOSA
ENGINEERING SERVICES DIVISION

CURB RAMP DETAILS

POTTER RD. & N. 115TH ST.

N.E. QUADRANT

CONTRACT:	23-07
FILE NO:	15-1075
DRAWN BY:	RPC
CHECKED BY:	JMS
SCALE:	AS SHOWN

D25

FILE NAME : S:\DEPARTMENT FOLDERS\ENGINEERING\ACAD_PROJECTS\23-07 115TH STREET\SHEETSPLAN\08 CURB RAMP DETAILS.DWG
LAYOUT NAME - Potter NE

PLOT DATE : 4/12/2023 1:36 PM

PLOT BY : RYAN CHRISTENSEN

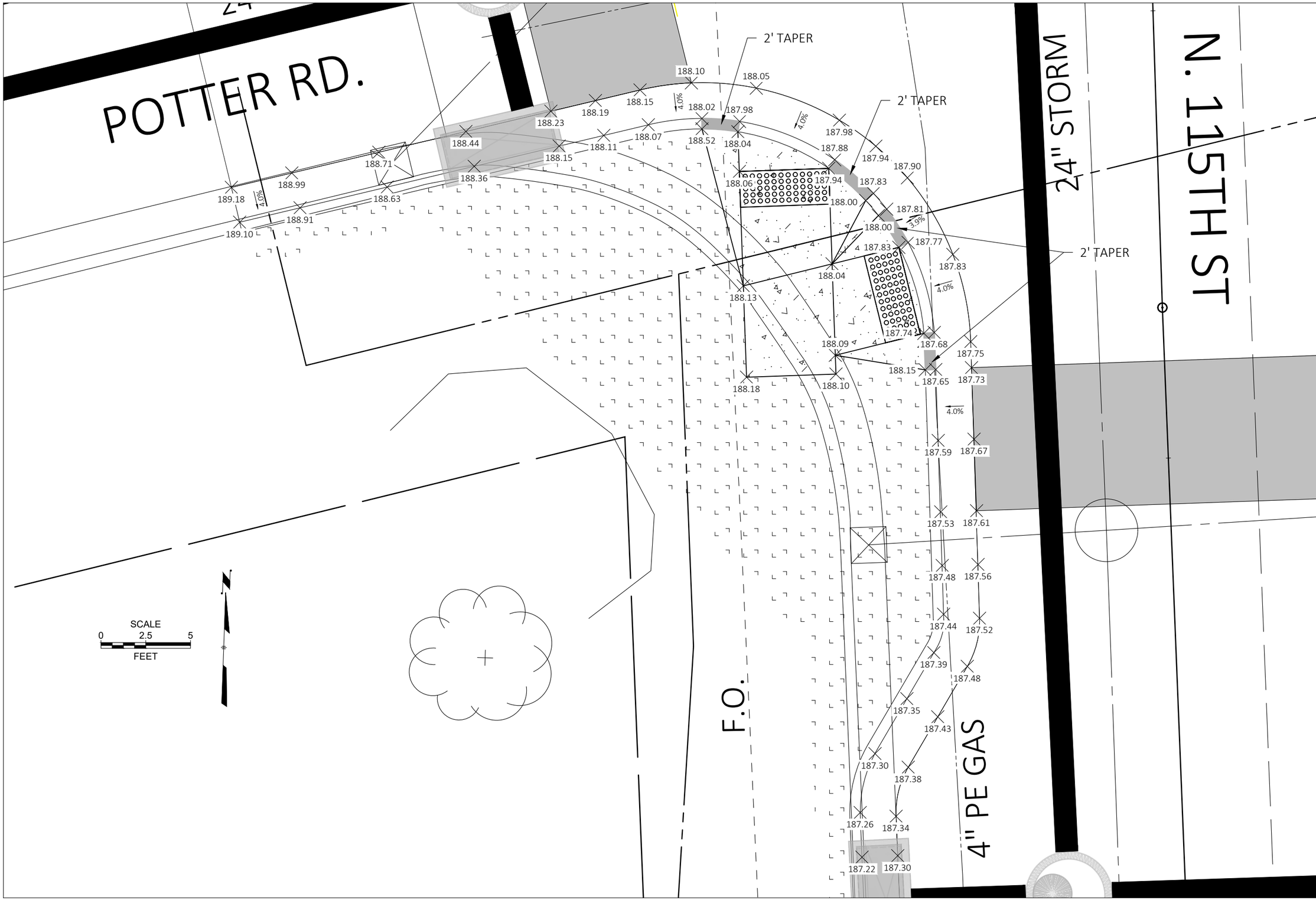

DATE	DESCRIPTION

CITY OF WAUWATOSA
ENGINEERING SERVICES DIVISION

CURB RAMP DETAILS

POTTER RD. & N. 115TH ST.

S.W. QUADRANT

CONTRACT:	23-07
FILE NO:	15-1075
DRAWN BY:	RPC
CHECKED BY:	JMS
SCALE:	AS SHOWN

D26

FILE NAME : S:\DEPARTMENT FOLDERS\ENGINEERING\ACAD_PROJECTS\23-07 115TH STREET\SHEETSPLAN\08 CURB RAMP DETAILS.DWG
LAYOUT NAME - Potter SW

PLOT DATE : 4/12/2023 1:36 PM

PLOT BY : RYAN CHRISTENSEN

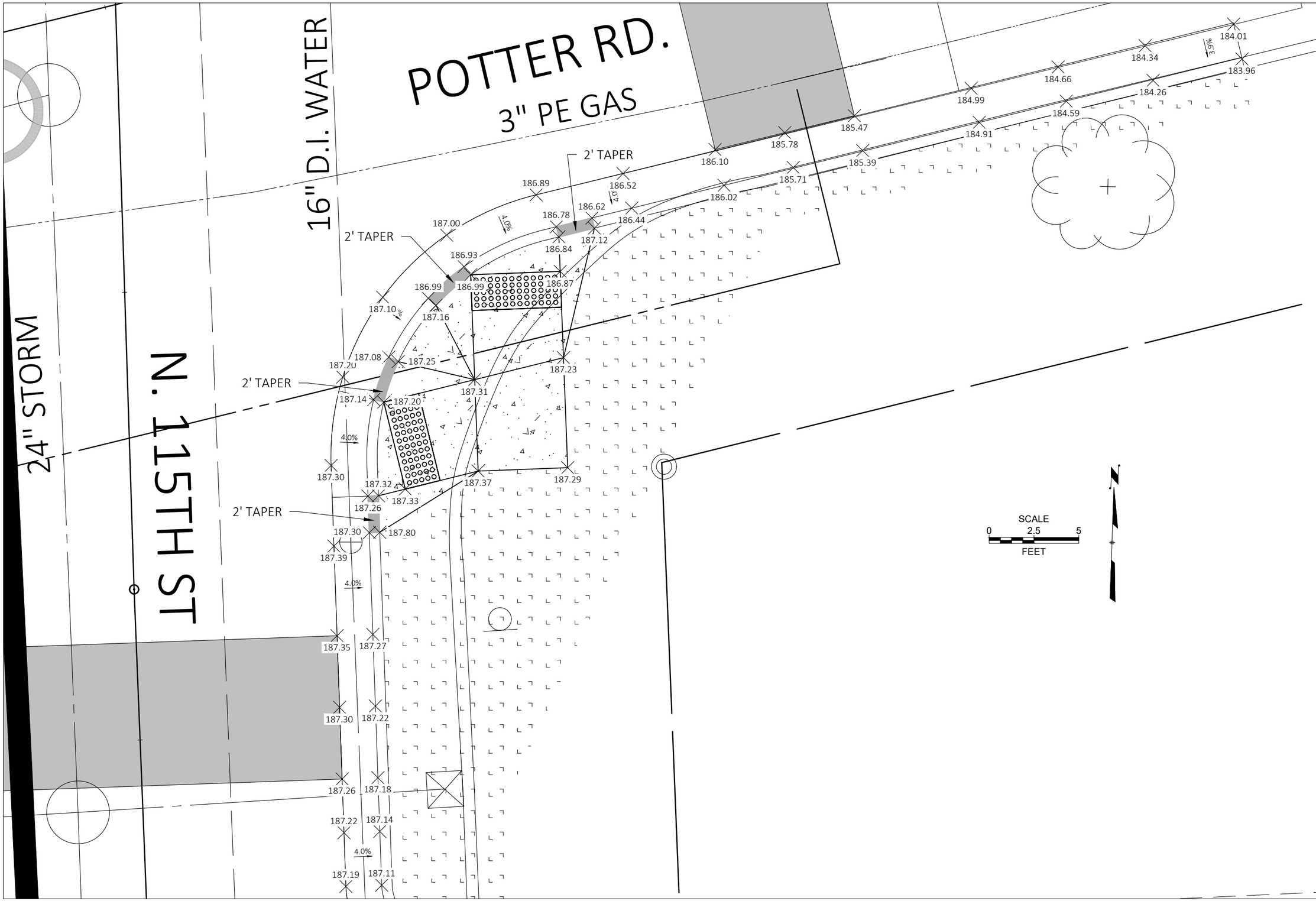

DESCRIPTION	DATE

CITY OF WAUWATOSA
ENGINEERING SERVICES DIVISION

CURB RAMP DETAILS

POTTER RD. & N. 115TH ST.

S.E. QUADRANT

CONTRACT:	23-07
FILE NO:	15-1075
DRAWN BY:	RPC
CHECKED BY:	JMS
SCALE:	AS SHOWN

D27

FILE NAME : S:\DEPARTMENT FOLDERS\ENGINEERING\ACAD_PROJECTS\23-07 115TH STREET\SHEETSPLAN\08 CURB RAMP DETAILS.DWG
LAYOUT NAME - Potter SE

PLOT DATE : 4/12/2023 1:36 PM

PLOT BY : RYAN CHRISTENSEN

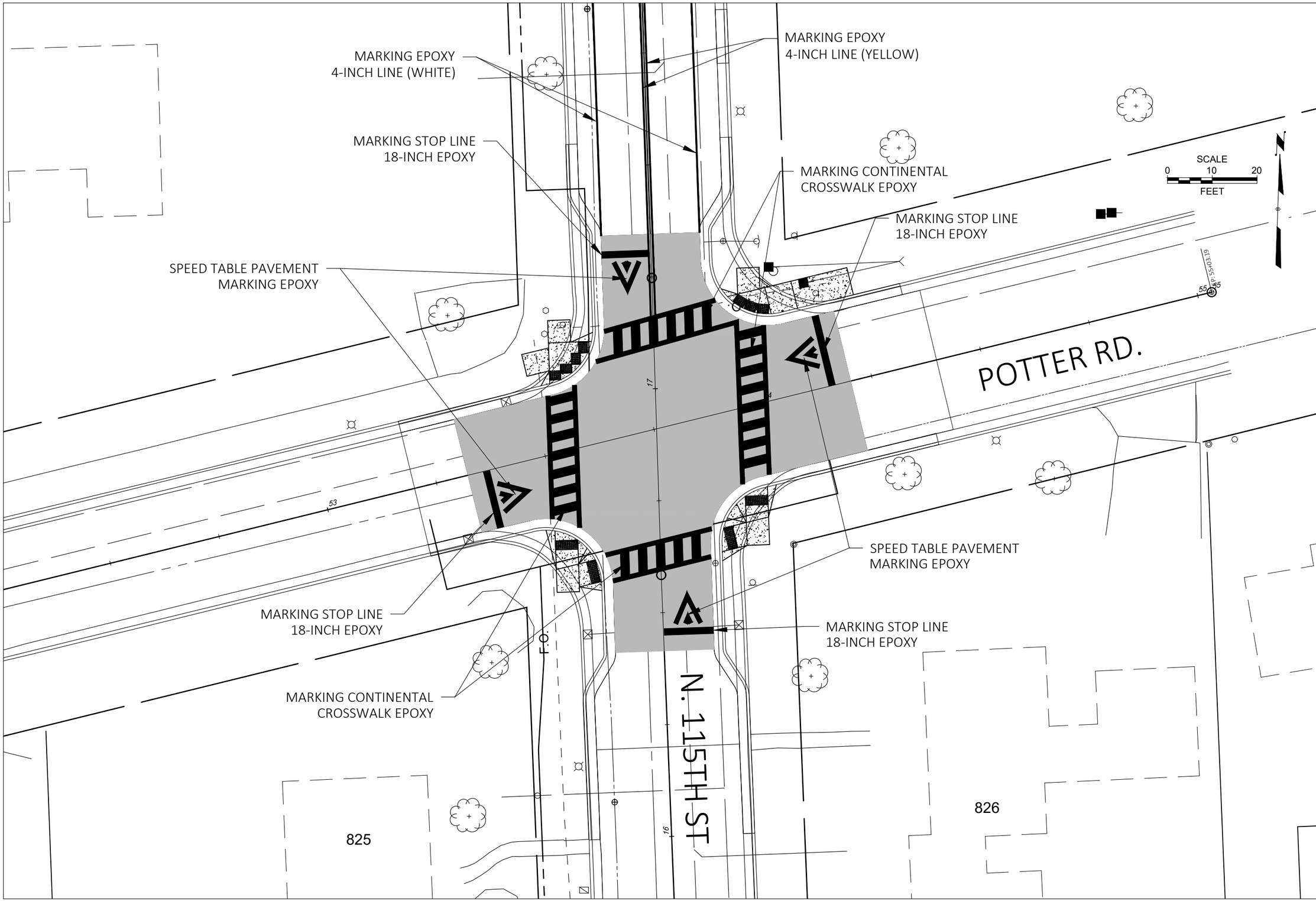

DATE	DESCRIPTION

CITY OF WAUWATOSA
ENGINEERING SERVICES DIVISION

PAVEMENT MARKING
POTTER RD. & N. 115TH ST.
INTERSECTION

CONTRACT:	23-07
FILE NO:	15-1075
DRAWN BY:	JMS/RPC
CHECKED BY:	JMS
SCALE:	AS SHOWN

D28

FILE NAME : S:\DEPARTMENT FOLDERS\ENGINEERING\ACAD_PROJECTS\23-07 115TH STREET\SHEETSPLAN\09 PAVEMENT MARKING.DWG
LAYOUT NAME - Intersection
PLOT DATE : 4/12/2023 1:12 PM
PLOT BY : RYAN CHRISTENSEN

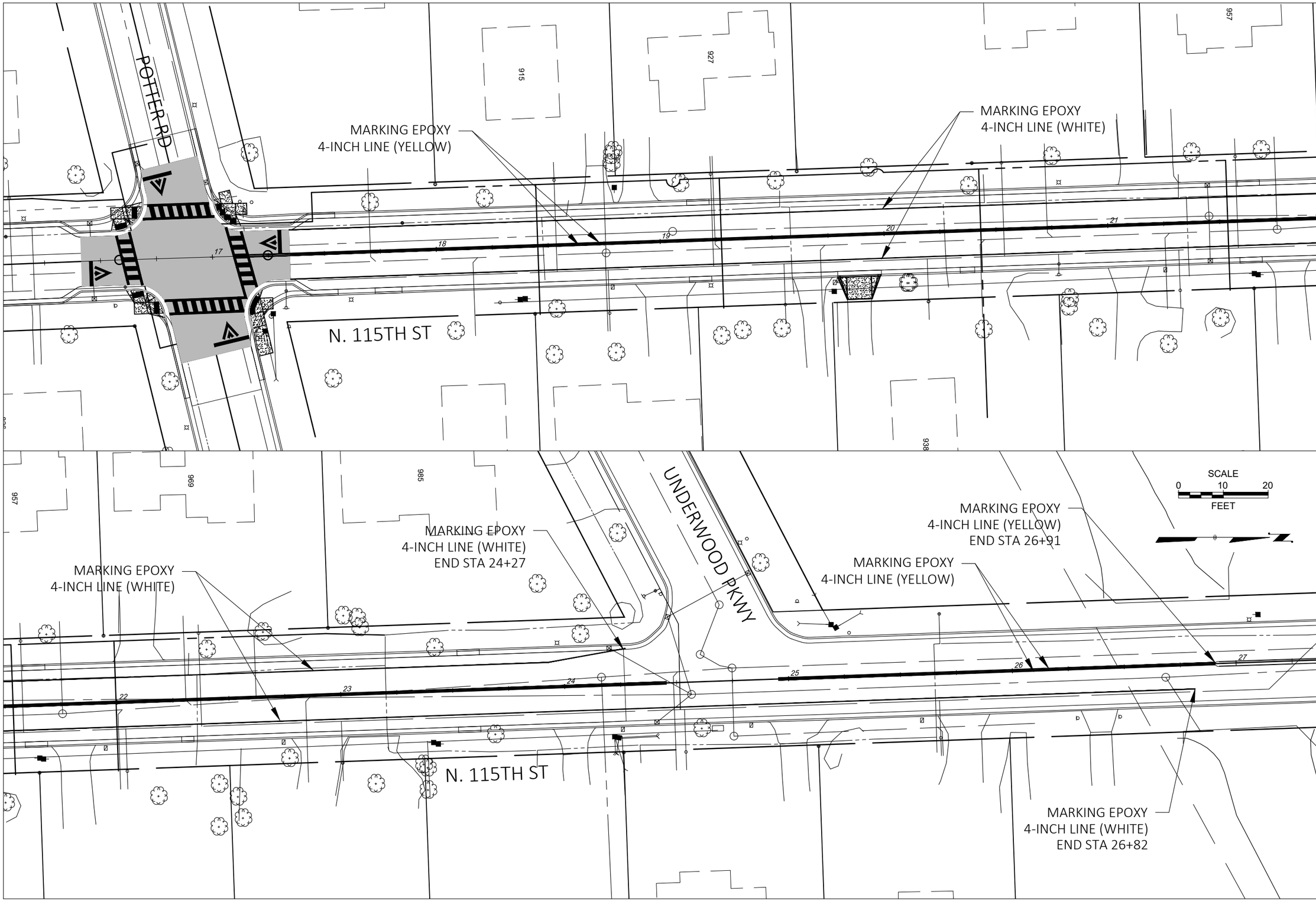

DATE	DESCRIPTION

CITY OF WAUWATOSA
ENGINEERING SERVICES DIVISION

PAVEMENT MARKING

N. 115TH ST.

FROM: N. 115TH ST.

TO: W. POTTER RD.

CONTRACT:	23-07
FILE NO:	15-1075
DRAWN BY:	JMS/RPC
CHECKED BY:	JMS
SCALE:	AS SHOWN

D29

FILE NAME : S:\DEPARTMENT FOLDERS\ENGINEERING\ACAD_PROJECTS\23-07 115TH STREET\SHEETSPLAN\09 PAVEMENT MARKING.DWG
LAYOUT NAME - POTTER-PKWY

PLOT DATE : 4/12/2023 1:12 PM

PLOT BY : RYAN CHRISTENSEN

SUMMARY OF QUANTITIES

DIVISION D - ROADWAY

NO.	ITEM NO.	ITEM	QUANTITY	UNIT
D1	D1-10	PULVERIZE AND RELAY ASPHALT PAVEMENT, 12-1/2" INCH DEPTH	8735	SY
D2	D1-12	MILLING DRIVEWAYS	5	EACH
D3	D1-14	MILLING TRANSITION TO CURB AND GUTTER OVERLAY	30	LF
D4	D1-15	REMOVING CONCRETE PAVEMENT	39	SY
D5	D1-16	REMOVING CURB AND GUTTER	766	LF
D6	D1-04	BASE AGGREGATE DENSE 1 1/4 INCH	160	TON
D7	D2-05	31" CONCRETE CURB AND GUTTER	636	LF
D8	D2-05	31" CONCRETE CURB AND GUTTER (INTERSECTION)	169	LF
D9	D3-07	7" CONCRETE SIDEWALK AND DRIVEWAY	290	SY
D10	D3-18	ASPHALTIC DRIVEWAY (REMOVE AND REPLACE)	18	SY
D11	D4-04	8" CONCRETE PAVEMENT	534	SY
D12	D4-20	3 MT 58-28 S HMA PAVEMENT	2203	TON
D13	D4-24	4 MT 58-28 S HMA PAVEMENT	920	TON
D14	D4-27	UTILITY TRENCH RESTORATION	334	SY
D15	D3-03	5" CONCRETE SIDEWALK	538	SF
D16	D3-10	DETECTABLE WARNING FIELD	75	SF
D17	D7-01	ADJUSTING WATER VALVE	6	EA
D18	D7-05	ADJUSTING WATER MANHOLE	4	EA
D19	D6-15	PAVEMENT MARKING EPOXY 4-INCH LINE, WHITE	1641	LF
D20	D6-20	PAVEMENT MARKING STOP LINE 18-INCH EPOXY	51	LF
D21	D6-37	PAVEMENT MARKING, 4-INCH, YELLOW EPOXY	1952	LF
D22	D6-39	PAVEMENT MARKING, 12-INCH, WHITE EPOXY	236	LF
D23	D6-43	PAVEMENT MARKING, RAISED INTERSECTION ARROW	4	EA
D24	D6-44	PAVEMENT MARKING, CONTINENTAL CROSSWALK EPOXY	26	EA
D25	D5-02	TOPSOIL AND SOD	1500	SF
D26	D6-08	NEW SIGN POST	9	EA
D27	D6-01	TRAFFIC CONTROL	1	LS
D28	D5-01	EROSION CONTROL	1	LS

DATE	DESCRIPTION
5/10/2021	ADDENDUM 2
	REMOVED "GROOVED" FROM
	GREEN SURFACING DESCRIPTION

CITY OF WAUWATOSA
ENGINEERING SERVICES DIVISION

MISCELLANEOUS QUANTITIES
N. 115TH ST. IMPROVEMENTS

CONTRACT: 23-07
FILE NO: 15-1075
DRAWN BY: RPC
CHECKED BY: XXX
SCALE: N/A

D30

PULVERIZING ASPHALT PAVEMENT, 12-1/2" INCH DEPTH

LOCATION			D1 SY
115TH ST			
	STA 1+00	TO STA 24+27	8,735
	TOTAL		**8,735**

REMOVING CONCRETE PAVEMENT

LOCATION			D4 SY
115TH ST			
	STA +89	TO STA 1+00	39
	TOTAL		**39**

MILLING DRIVEWAYS

LOCATION		OFFSET	D2 EA
115TH ST			
719 115TH ST	STA 10+65	LT	1
725 115TH ST	STA 11+10	LT	1
745 115TH ST	STA 12+62	LT	1
808 115TH ST	STA 14+62	RT	1
814 115TH ST	STA 15+14	RT	1
	TOTAL		**5**

MILLING TRANSITION TO CURB AND GUTTER OVERLAY

LOCATION		OFFSET	D3 LF
N. 68TH ST.			
	STA 9+35	LT	10
	STA 13+00	LT	10
	STA 13+25	RT	10
	TOTAL		**30**

ASPHALTIC DRIVEWAY (REMOVE & REPLACE)

LOCATION		OFFSET	D9 SY
115TH ST			
11500 WISCONSIN AVE	STA 10+12	LT	4
731 115TH ST	STA 11+63	LT	4
739 115TH ST	STA 12+17	LT	3
750 115TH ST	STA 13+67	RT	4
802 115TH ST	STA 14+10	RT	3
	TOTAL		**18**

DESCRIPTION

DATE

CITY OF WAUWATOSA

ENGINEERING SERVICES DIVISION

MISCELLANEOUS QUANTITIES

N. 115TH ST. IMPROVEMENTS

CONTRACT: 23-07

FILE NO: 15-1075

DRAWN BY: RPC

CHECKED BY: XXX

SCALE: N/A

D31

REMOVING CURB AND GUTTER

LOCATION				D5 LF
11504 BLUEMOUND RD (ON 115TH ST)	STA 2+36	TO	STA 2+52	16
500 115TH ST	STA 2+72	TO	STA 2+80	8
534 115TH ST	STA 5+05	TO	STA 5+21	16
608 115TH ST	STA 6+50	TO	STA 6+68	18
718 115TH ST	STA 10+72	TO	STA 10+78	6
11422 POTTER RD (ON 115TH ST)	STA 17+72	TO	STA 17+84	12
938 115TH ST	STA 19+79	TO	STA 19+99	20
	STA 20+33	TO	STA 20+40	7
964 115TH ST	STA 22+28	TO	STA 22+34	6
INTERSECTION OF POTTER RD AND 115TH ST	STA 16+00	TO	STA 16+88 SE	119
	STA 16+08	TO	STA 16+68 SW	96
	STA 16+93	TO	STA 17+55 NW	92
	STA 17+19	TO	STA 17+56 NE	70
NEW INLET LOCATIONS	PROJECT WIDE			280
	TOTAL			**766**

DESCRIPTION

DATE

CITY OF WAUWATOSA
ENGINEERING SERVICES DIVISION

MISCELLANEOUS QUANTITIES

N. 115TH ST. IMPROVEMENTS

CONTRACT: 23-07
FILE NO: 15-1075
DRAWN BY: RPC
CHECKED BY: XXX
SCALE: N/A

D32

HMA PAVEMENT

LOCATION				D12 3 MT 58-28 S HMA PAVEMENT TON	D13 4 MT 58-28 S HMA PAVEMENT TON	AREA (SF)
115TH ST						
	STA +89	TO	STA 16+20	1,651	661	51663.6441
	STA 17+34	TO	STA 24+27	528	247	22011.8042
POTTER RD						
	STA 53+20	TO	STA 53+32	8	4	317.1639
	STA 54+20	TO	STA 54+40	16	8	630.1497
	TOTAL			**2,203**	**920**	

UTILITY TRENCH RESTORATION

LOCATION				D14 UTILITY TRECH RESTORATION SY	
POTTER RD-116TH					
	MH 011	TO	STA 53+20	334	
	TOTAL			**334**	

0
0
0
0
0
0
0
0
0
0
0
0

DESCRIPTION

DATE

CITY OF WAUWATOSA
ENGINEERING SERVICES DIVISION

MISCELLANEOUS QUANTITIES

N. 115TH ST. IMPROVEMENTS

CONTRACT: 23-07
FILE NO: 15-1075
DRAWN BY: RPC
CHECKED BY: XXX
SCALE: N/A

D33

CONCRETE PAVEMENT

LOCATION	D10 8" CONCRETE PAVEMENT SY
INTERSECTION OF POTTER RD AND 115TH ST (RAISED INTERSECTION)	534
TOTAL	**534**

HMA PAVEMENT

LOCATION				D12 3 MT 58-28 S HMA PAVEMENT TON	D13 4 MT 58-28 S HMA PAVEMENT TON
115TH ST					
	STA +89	TO	STA 16+20	1,651	661
	STA 17+34	TO	STA 24+27	528	247
POTTER RD					
	STA 53+20	TO	STA 53+32	8	4
	STA 54+20	TO	STA 54+40	16	8
	TOTAL			**2,203**	**920**

UTILITY TRENCH RESTORATION

LOCATION				D13 UTILITY TRECH RESTORATION SY
POTTER RD-116TH				
	MH 011	TO	STA 53+20	334
	TOTAL			**334**

DESCRIPTION

DATE

CITY OF WAUWATOSA
ENGINEERING SERVICES DIVISION

MISCELLANEOUS QUANTITIES

N. 115TH ST. IMPROVEMENTS

CONTRACT: 23-07
FILE NO: 15-1075
DRAWN BY: RPC
CHECKED BY: XXX
SCALE: N/A

D34

CONCRETE DRIVE APPROACH

STREET	ADDRESS	D6 *BASE AGGREGATE DENSE 1 1/4-INCH TONS	D8 7" CONCRETE DRIVEWAY SF
115TH			
	608 115TH ST	5	140
	938 115TH ST	6	150
	TOTAL	**11**	**290**

*ADDITIONAL QUANTITIES SHOWN ELSEWHERE

CONCRETE CURB RAMPS

LOCATION	QUADRANT	D6 *BASE AGGREGATE DENSE 1 1/4-INCH TONS	D14 5" CONCRETE SIDEWALK SF	D15 DETECTABLE WARNING FIELD SF	D24 *TOPSOIL AND SOD SF
INTERSECTION OF POTTER RD AND 115TH ST	SE	3	121	20	505
	SW	3	113	20	482
	NW	4	122	20	0
	NE	5	183	15	513
	TOTAL	**15**	**538**	**75**	**1,500**

*ADDITIONAL QUANTITIES SHOWN ELSEWHERE

ADJUSTING WATER VALVE

LOCATION	D16 EA
PROJECTWIDE	6
TOTAL	**6**

ADJUSTING WATER MANHOLE

LOCATION	D17 EA
PROJECTWIDE	4
TOTAL	**4**

SIGN POST

LOCATION	D25 EA
*UNDISTRIBUTED (WHERE EXISTING POST IS NOT V-LOCK OR DAMAGED)	9

*AS DIRECTED BY THE ENGINEER

DESCRIPTION
DATE

CITY OF WAUWATOSA
ENGINEERING SERVICES DIVISION

MISCELLANEOUS QUANTITIES
N. 115TH ST. IMPROVEMENTS

CONTRACT: 23-07
FILE NO: 15-1075
DRAWN BY: RPC
CHECKED BY: XXX
SCALE: N/A

D35

PAVEMENT MARKING

LOCATION		OFFSET	D18 PAVEMENT MARKING 4-INCH LINE WHITE EPOXY LF	D19 PAVEMENT MARKING STOP LINE 18-INCH WHITE EPOXY LF	D20 PAVEMENT MARKING 4-INCH LINE YELLOW EPOXY LF
115TH ST TO UNDERWOOD PKWY					
	STA 17+15 TO STA 26+91	CL			1952
	STA 17+34 TO STA 24+27	LT	693		--
	STA 17+34 TO STA 26+82	RT	948		--
					--
		SUBTOTAL	**1,641**	**--**	**1,952**
		N	--	11	
INTERSECTION OF POTTER RD		E	--	16	
AND 115TH ST		S	--	11	
		W	--	13	
		SUBTOTAL	**--**	**51**	**--**
		TOTAL	**1,641**	**51**	**1,952**

PAVEMENT MARKING

LOCATION		OFFSET	D21 PAVEMENT MARKING 12-INCH WHITE EPOXY LF	D22 PAVEMENT MARKING RAISED INTERSECTION ARROW WHITE EPOXY EA	D23 PAVEMENT MARKING CONTINENTAL CROSSWALK EPOXY (WHITE) EA
115TH ST TO UNDERWOOD PKWY					
	STA 17+15 TO STA 26+91	CL	--	--	--
	STA 17+34 TO STA 24+27	LT	--	--	--
	STA 17+34 TO STA 26+82	RT	--	--	--
			--	--	--
		SUBTOTAL	**--**	**--**	**--**
		N	59	1	7
INTERSECTION OF POTTER RD		E	70	1	6
AND 115TH ST		S	47	1	8
		W	60	1	5
		SUBTOTAL	**236**	**4**	**26**
		TOTAL	**236** --	**4**	**26**

DESCRIPTION

DATE

CITY OF WAUWATOSA

ENGINEERING SERVICES DIVISION

MISCELLANEOUS QUANTITIES

N. 115TH ST. IMPROVEMENTS

CONTRACT: 23-07

FILE NO: 15-1075

DRAWN BY: RPC

CHECKED BY: XXX

SCALE: N/A

D36

DATE	DESCRIPTION

CITY OF WAUWATOSA
ENGINEERING SERVICES DIVISION

STREET LIGHTING PROJECT AREA

CONTRACT:	23-07
FILE NO:	23-275
DRAWN BY:	WAT
CHECKED BY:	WTW
SCALE:	

E01

FILE NAME : S:\DEPARTMENT FOLDERS\ENGINEERING\ACAD_PROJECTS\23-07 115TH STREET\DESIGN\N 115TH ST ELECTRICAL.DWG PLOT DATE : 4/12/2023 12:09 PM PLOT BY : WTREU

GENERAL NOTES (STREET LIGHTING REMOVAL PLANS)

1. EXISTING INFORMATION IS BASED ON AVAILABLE ORIGINAL PLANS AND SITE OBSERVATIONS AND IS NOT GUARANTEED 100% ACCURATE. CONTRACTOR TO VERIFY EXISTING CONDITIONS AND ADJUST REMOVAL AND INSTALLATION ACCORDINGLY.
2. LIGHT POLES (BEING REMOVED) AND UNDERGROUND CABLES (TO BE ABANDONED) ARE DIRECT BURY, UNLESS OTHERWISE NOTED.
3. CABINET 'C' (240/480V) IS LOCATED ON THE NORTHEAST CORNER OF N 113th ST AND W POTTER RD ACROSS FROM 925 N 113th ST ON THE UNDERWOOD ELEMENTARY PROPERTY.
4. AFTER REMOVAL, POLE CAPS, LED FIXTURES AND HANDHOLE COVERS ARE TO BE DELIVERED TO THE CITY OF WAUWATOSA PUBLIC WORKS YARD LOCATED AT 11100 W WALNUT RD. CONTACT THE CITY ELECTRICAL DEPT. FOR COORDINATION. POLES AND ARMS ARE TO BE DISPOSED OF BY THE CONTRACTOR.
5. COORDINATE CABINET LOCKOUTS WITH THE CITY OF WAUWATOSA ELECTRICAL DEPT.

LEGEND (STREET LIGHTING REMOVALS)

C-4-10 REM	EXISTING WAUWATOSA LIGHTING UNIT TO BE REMOVED
	EXISTING CABLE
	EXISTING DIRECT BURY CABLE TO BE ABANDONED
CIR 4	CIRCUIT NUMBER

CITY OF WAUWATOSA NUMBERING SCHEME

C-4-10
- POLE NUMBER
- CIRCUIT NUMBER
- CONTROL CABINET (SOURCE)

C-4-10JB
- PULL BOX NUMBER
- CIRCUIT NUMBER
- CONTROL CABINET (SOURCE)

DESCRIPTION | DATE

CITY OF WAUWATOSA
ENGINEERING SERVICES DIVISION

STREET LIGHTING REMOVALS

N 115th ST

FROM: W BLUE MOUND RD
TO: W UNDERWOOD PKWY

CONTRACT: 23-07
FILE NO: 23-275
DRAWN BY: WAT
CHECKED BY: WTW
SCALE:

E02

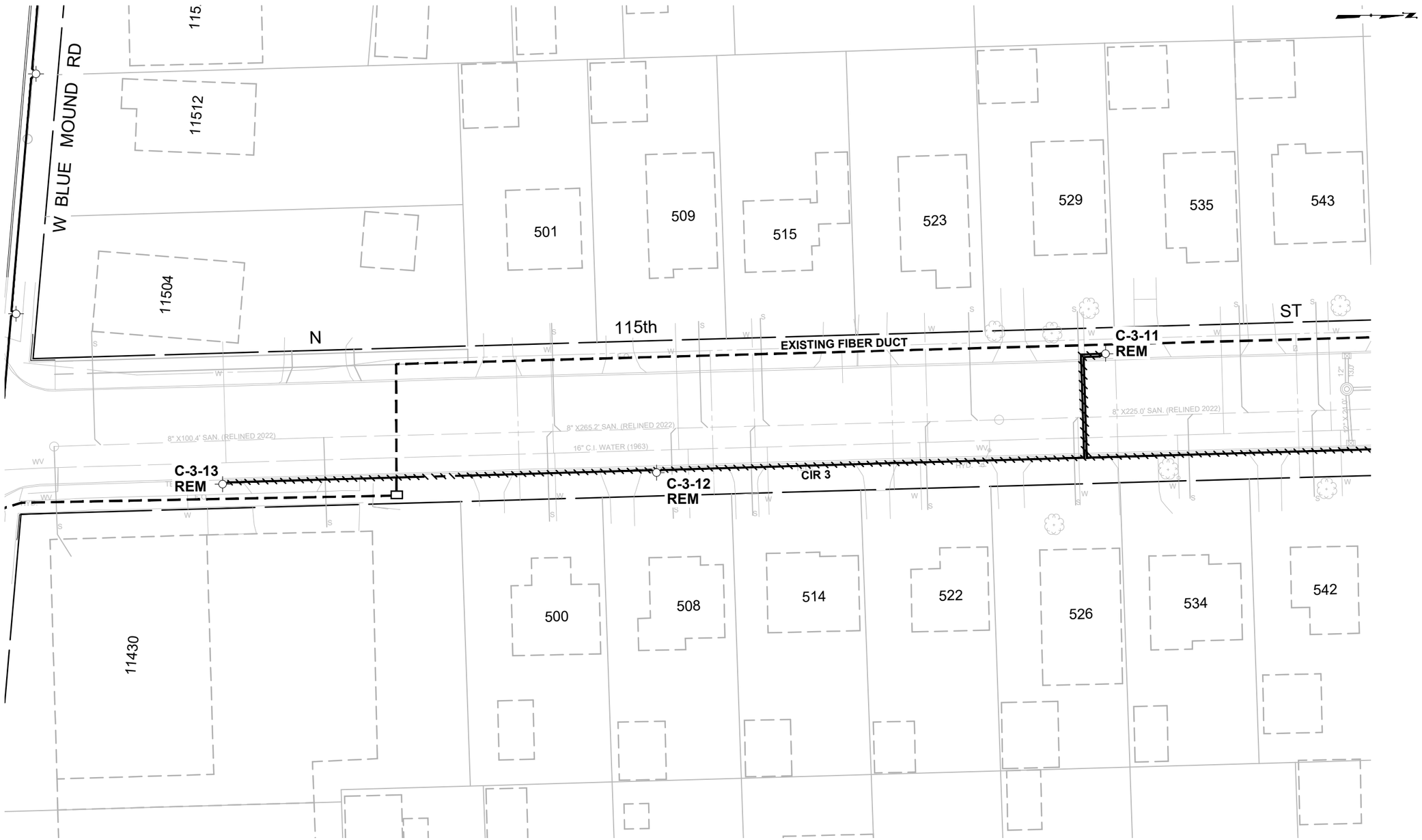

Underground utilities have been shown to a reasonable degree of accuracy using diggers hotline field locates and record drawings. However, the city does not guarantee their exact size, location or depth or that of others not shown. The contractor shall verify the existence of these utilities and those not shown. Costs for locating and delay shall be incidental to the contract.

DATE	DESCRIPTION

CITY OF WAUWATOSA
ENGINEERING SERVICES DIVISION

STREET LIGHTING REMOVALS

N 115th ST

FROM: W BLUE MOUND RD
TO: W UNDERWOOD PKWY

CONTRACT:	23-07
FILE NO:	23-275
DRAWN BY:	WAT
CHECKED BY:	WTW
SCALE:	1" = 40'

E03

FILE NAME : S:\DEPARTMENT FOLDERS\ENGINEERING\ACAD_PROJECTS\23-07 115TH STREET\DESIGN\N 115TH ST ELECTRICAL.DWG PLOT DATE : 4/12/2023 12:10 PM PLOT BY : WTREU

Underground utilities have been shown to a reasonable degree of accuracy using diggers hotline field locates and record drawings. However, the city does not guarantee their exact size, location or depth or that of others not shown. The contractor shall verify the existence of these utilities and those not shown. Costs for locating and delay shall be incidental to the contract.

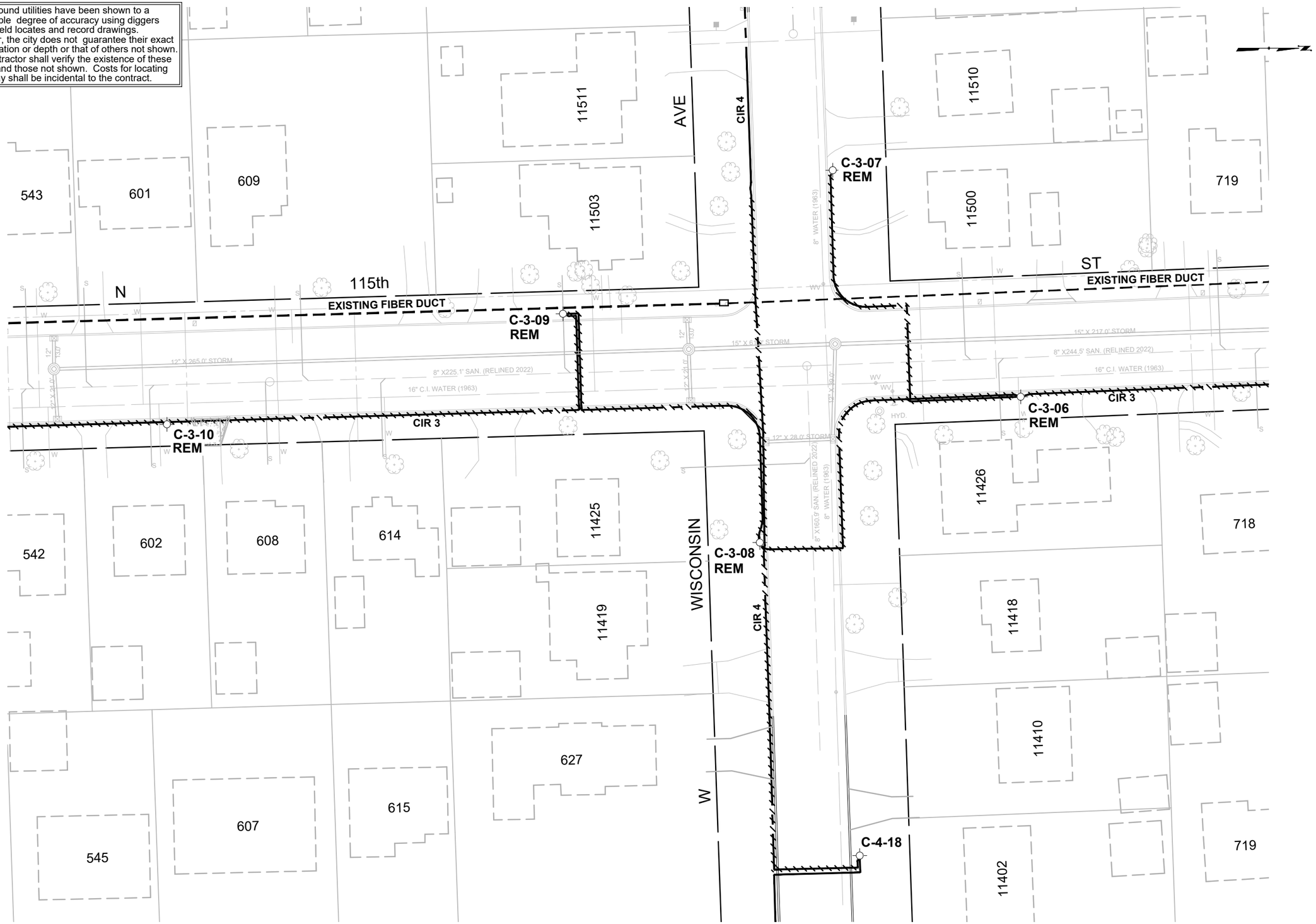

CONTRACT:	23-07
FILE NO:	23-275
DRAWN BY:	WAT
CHECKED BY:	WTW
SCALE:	1" = 40'

E04

FROM: W BLUE MOUND RD

TO: W UNDERWOOD PKWY

N 115th ST

STREET LIGHTING REMOVALS

CITY OF WAUWATOSA

ENGINEERING SERVICES DIVISION

DATE	DESCRIPTION

FILE NAME : S:\DEPARTMENT FOLDERS\ENGINEERING\ACAD_PROJECTS\23-07 115TH STREET\DESIGN\N 115TH ST ELECTRICAL.DWG PLOT DATE : 4/12/2023 12:11 PM PLOT BY : WTREU

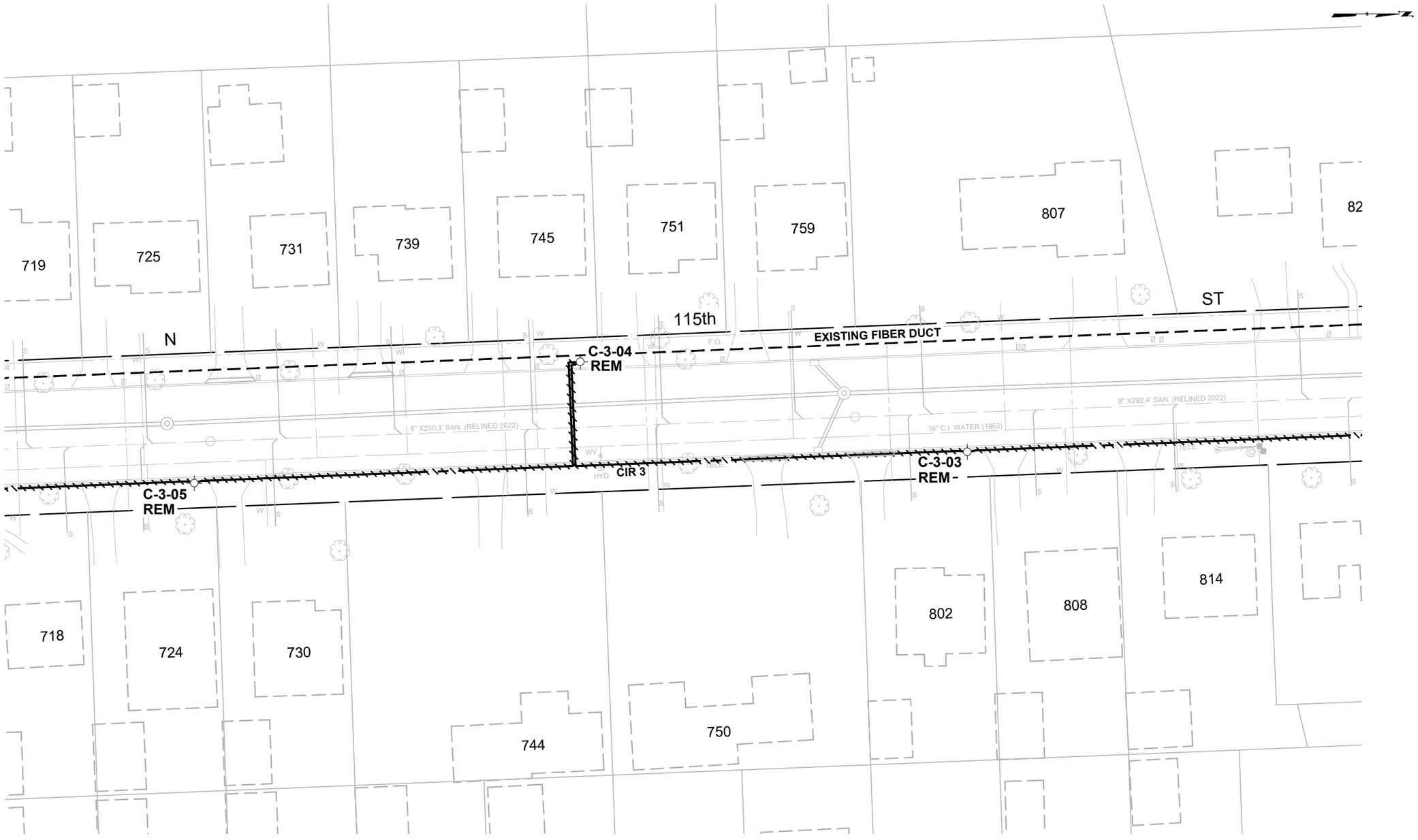

Underground utilities have been shown to a reasonable degree of accuracy using diggers hotline field locates and record drawings. However, the city does not guarantee their exact size, location or depth or that of others not shown. The contractor shall verify the existence of these utilities and those not shown. Costs for locating and delay shall be incidental to the contract.

DATE	DESCRIPTION

CITY OF WAUWATOSA
ENGINEERING SERVICES DIVISION

STREET LIGHTING REMOVALS

N 115th ST

FROM: W BLUE MOUND RD
TO: W UNDERWOOD PKWY

CONTRACT: 23-07
FILE NO: 23-275
DRAWN BY: WAT
CHECKED BY: WTW
SCALE: 1" = 40'

E05

FILE NAME : S:\DEPARTMENT FOLDERS\ENGINEERING\ACAD_PROJECTS\23-07 115TH STREET\DESIGN\N 115TH ST ELECTRICAL.DWG PLOT DATE : 4/12/2023 12:12 PM PLOT BY : WTREU

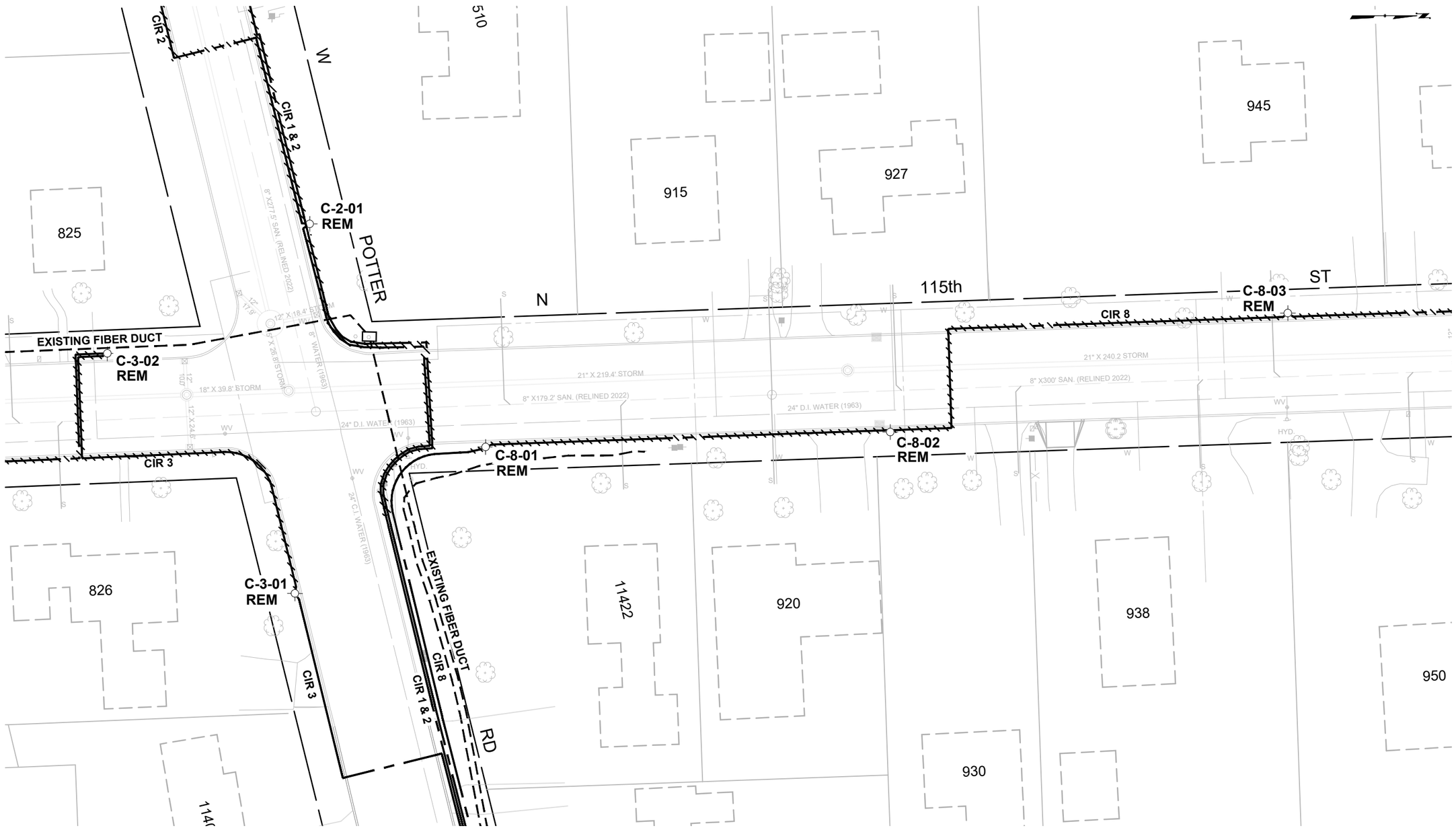

Underground utilities have been shown to a reasonable degree of accuracy using diggers hotline field locates and record drawings. However, the city does not guarantee their exact size, location or depth or that of others not shown. The contractor shall verify the existence of these utilities and those not shown. Costs for locating and delay shall be incidental to the contract.

DATE	DESCRIPTION

CITY OF WAUWATOSA
ENGINEERING SERVICES DIVISION

STREET LIGHTING REMOVALS

N 115th ST

FROM: W BLUE MOUND RD
TO: W UNDERWOOD PKWY

CONTRACT:	23-07
FILE NO:	23-275
DRAWN BY:	WAT
CHECKED BY:	WTW
SCALE:	1" = 40'

E06

FILE NAME : S:\DEPARTMENT FOLDERS\ENGINEERING\ACAD_PROJECTS\23-07 115TH STREET\DESIGN\N 115TH ST ELECTRICAL.DWG PLOT DATE : 4/12/2023 12:14 PM PLOT BY : WTREU

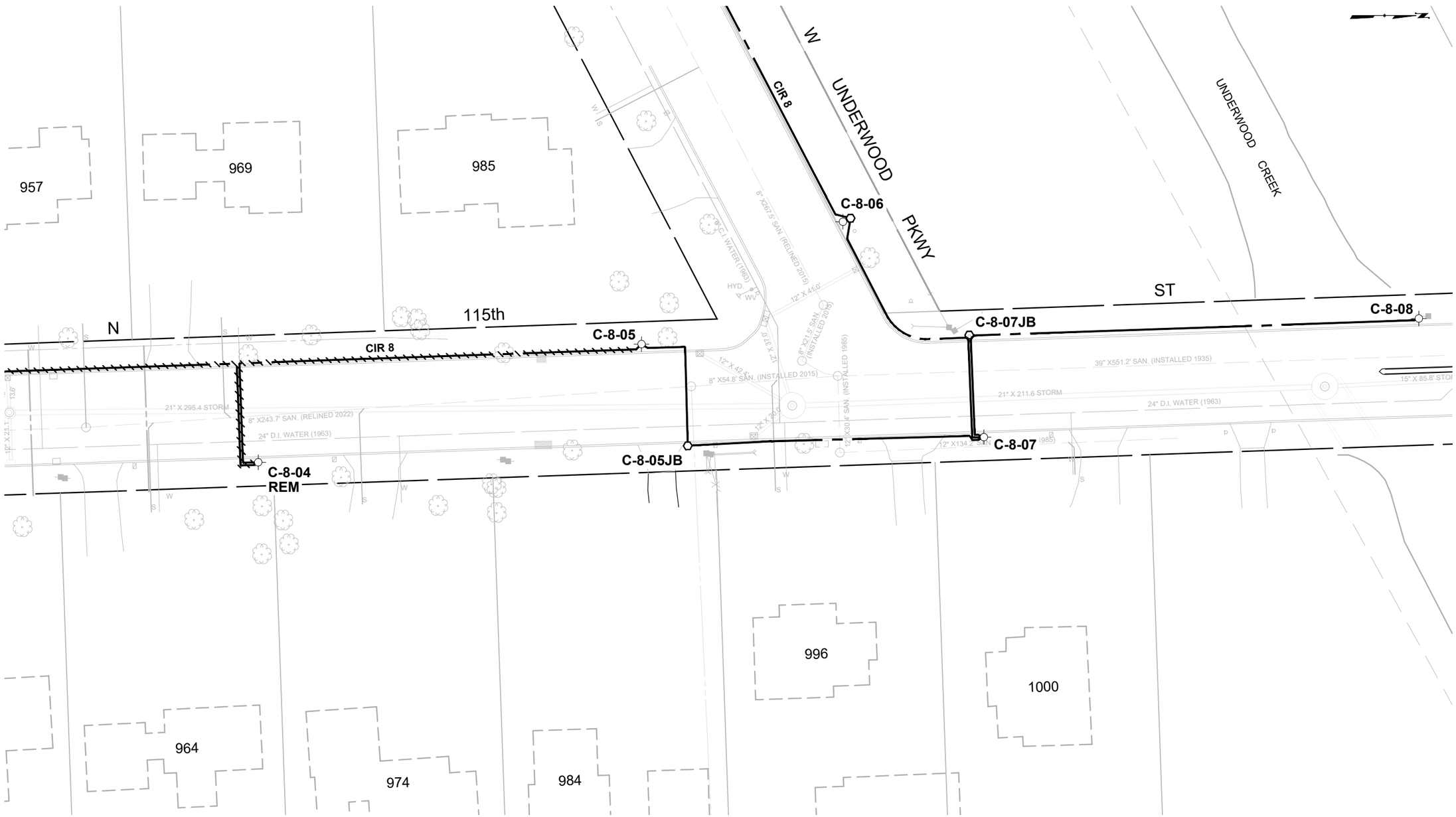

Underground utilities have been shown to a reasonable degree of accuracy using diggers hotline field locates and record drawings. However, the city does not guarantee their exact size, location or depth or that of others not shown. The contractor shall verify the existence of these utilities and those not shown. Costs for locating and delay shall be incidental to the contract.

DATE	DESCRIPTION

CITY OF WAUWATOSA
ENGINEERING SERVICES DIVISION

STREET LIGHTING REMOVALS

N 115th ST

FROM: W BLUE MOUND RD
TO: W UNDERWOOD PKWY

CONTRACT:	23-07
FILE NO:	23-275
DRAWN BY:	WAT
CHECKED BY:	WTW
SCALE:	1" = 40'

E07

FILE NAME : S:\DEPARTMENT FOLDERS\ENGINEERING\ACAD_PROJECTS\23-07 115TH STREET\DESIGN\N 115TH ST ELECTRICAL.DWG PLOT DATE : 4/12/2023 12:15 PM PLOT BY : WTREU

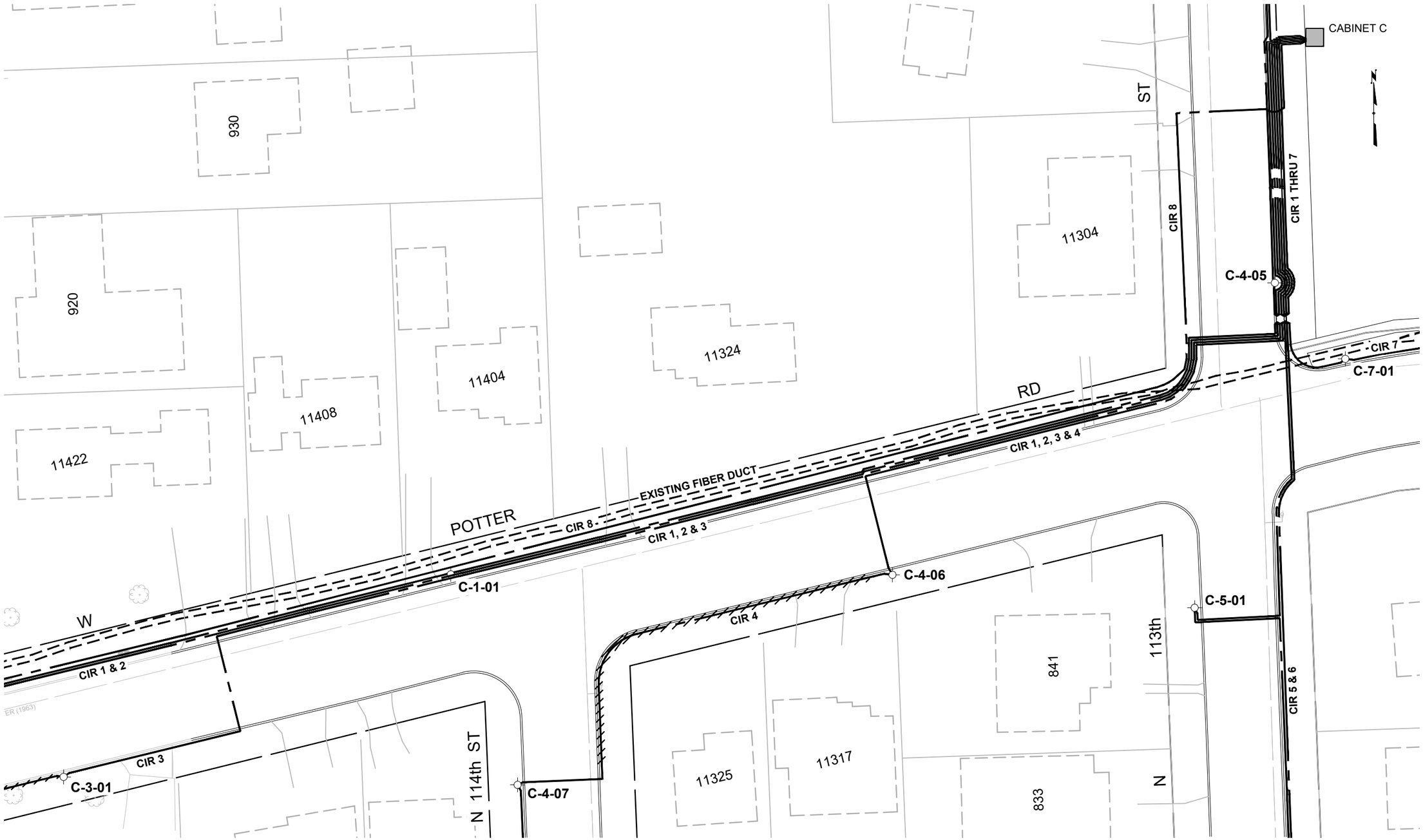

Underground utilities have been shown to a reasonable degree of accuracy using diggers hotline field locates and record drawings. However, the city does not guarantee their exact size, location or depth or that of others not shown. The contractor shall verify the existence of these utilities and those not shown. Costs for locating and delay shall be incidental to the contract.

DATE	DESCRIPTION

CITY OF WAUWATOSA
ENGINEERING SERVICES DIVISION

STREET LIGHTING REMOVALS

W POTTER RD

FROM: N 113th ST TO: N 116th ST

CONTRACT:	23-07
FILE NO:	23-275
DRAWN BY:	WAT
CHECKED BY:	WTW
SCALE:	1" = 40'

E08

FILE NAME : S:\DEPARTMENT FOLDERS\ENGINEERING\ACAD_PROJECTS\23-07 115TH STREET\DESIGN\N 115TH ST ELECTRICAL.DWG PLOT DATE : 4/12/2023 12:16 PM PLOT BY : WTREU

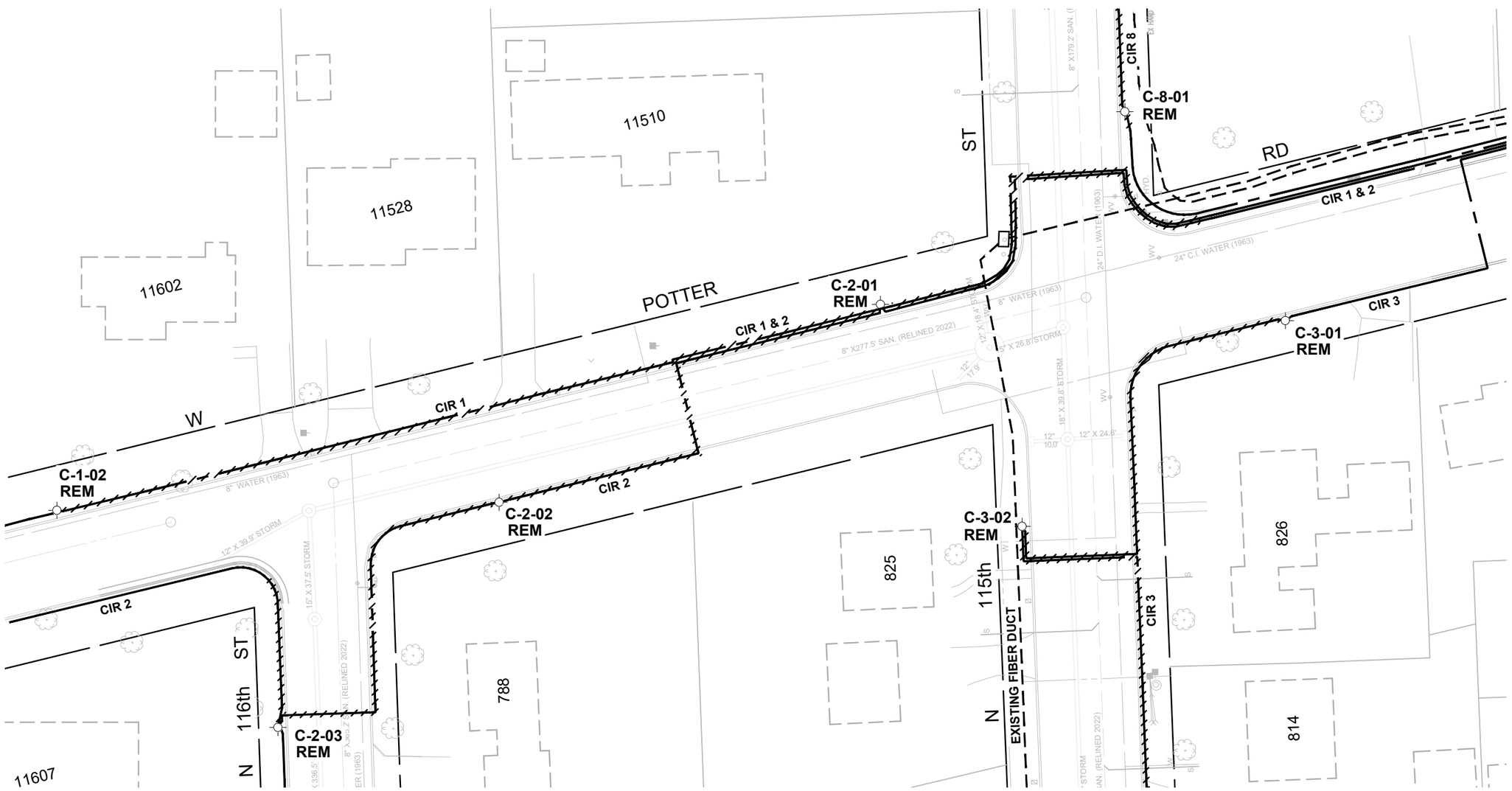

Underground utilities have been shown to a reasonable degree of accuracy using diggers hotline field locates and record drawings. However, the city does not guarantee their exact size, location or depth or that of others not shown. The contractor shall verify the existence of these utilities and those not shown. Costs for locating and delay shall be incidental to the contract.

DATE	DESCRIPTION

CITY OF WAUWATOSA
ENGINEERING SERVICES DIVISION

STREET LIGHTING REMOVALS

N 115th ST

FROM: W BLUE MOUND RD
TO: W UNDERWOOD PKWY

CONTRACT: 23-07
FILE NO: 23-275
DRAWN BY: WAT
CHECKED BY: WTW
SCALE: 1" = 40'

E09

FILE NAME : S:\DEPARTMENT FOLDERS\ENGINEERING\ACAD_PROJECTS\23-07 115TH STREET\DESIGN\N 115TH ST ELECTRICAL.DWG PLOT DATE : 4/12/2023 12:17 PM PLOT BY : WTREU

GENERAL NOTES (PROPOSED STREET LIGHTING PLANS)

1. COORDINATE LIGHTING REMOVAL AND INSTALLATION WITH CONSTRUCTION TO MINIMIZE DURATION OF OUTAGE(S) TO EXTENT POSSIBLE.
2. EXACT LOCATIONS OF LIGHTING UNITS, PULL BOXES, AND WIRING SHALL BE VERIFIED WITH THE CITY AND SUBJECT TO ADJUSTMENT BASED ON CONFLICTS WITH UNDERGROUND UTILITIES.
3. MATERIALS AND WORK NOT SPECIFICALLY IDENTIFIED AS A BID ITEM SHALL BE INCIDENTAL AND INCLUDED IN A RELATED BID ITEM.
4. THE INTENT IS TO INSTALL NEW LIGHTING DUCTS BETWEEN BACK OF CURB AND TREES WHERE INDICATED. THE EXACT ROUTE OF DUCTS SHALL BE ADJUSTED AS NECESSARY DUE TO UTILITY CONFLICTS. ANY ADJUSTMENTS SHALL BE BROUGHT UP TO THE CITY FOR APPROVAL.
5. NEW LIGHTING HDPE DUCTS SHALL HAVE A MINIMUM OF 18" AND A MAXIMUM OF 24" OF COVER. CONTRACTOR SHALL INSTALL ALL DUCT LENGTHS PRIOR TO PULLING CABLE THROUGH.
6. NEW PVC CONDUIT SHALL HAVE A MINIMUM OF 24" AND A MAXIMUM OF 30" OF COVER.
7. IN PULL BOXES: SPLICES SHALL ONLY OCCUR IN CONDUCTORS AS NECESSARY DUE TO SPLITTING CIRCUIT CONDUCTORS IN MULTIPLE DIRECTIONS (CONDUCTORS ONLY ROUTED THROUGH A PULL BOX SHALL NOT BE SPLICED). CONTRACTOR TO PROVIDE 10 FEET OF SLACK ON ALL CONDUCTORS IN PULL BOX. INCOMING LINE SIDE CONDUCTORS SHALL BE MARKED WITH BLUE TAPE.
8. HDPE DUCT AND PVC CONDUIT TO BE DIRECTIONAL BORED. STREET CROSSINGS IN AREAS WHERE PAVEMENT IS TO BE REPLACED CAN BE OPEN CUT.
9. EXISTING OR TEMPORARY LIGHTING SYSTEM TO REMAIN LIVE UNTIL NEW SYSTEM, INCLUDING POLES, IS READY FOR ACTIVATION.
10. EXISTING CIRCUIT IS A 2-WIRE CIRCUIT (ONE BLACK WIRE, ONE WHITE WIRE). NEW STREET LIGHT CABLE SHALL BE 2 - #8 AWG USE/XLP WIRES (ONE BLACK, ONE WHITE) WITH ONE #8 AWG USE/XLP GREEN GROUND WIRE INSTALLED IN 1" HDPE DUCT. INCOMING (LINE SIDE) CONDUCTORS IN POLES AND PULL BOXES SHALL BE MARKED WITH BLUE TAPE.
11. CONTACT THE CITY OF WAUWATOSA ELECTRICAL DEPT. TO COORDINATE CABINET LOCKOUT.

LEGEND (PROPOSED STREET LIGHTING PLANS)

	EXISTING WAUWATOSA LIGHTING UNIT
	EXISTING CABLE (2 NO. 4 DIRECT BURY PLUS GROUND)
	PROPOSED STANDARD LIGHTING UNIT WITH LED LUMINAIRE/CONCRETE POLE
	PROPOSED HDPE DUCT 2 - #8 AWG COPPER USE/XLP WIRE & 1 - #8 AWG COPPER USE/XLP GREEN INSULATED GROUND WIRE
	PROPOSED SINGLE 3 INCH SCH 80 PVC CONDUIT SLEEVE
	PROPOSED 17 X 30 X 18 - INCH COMPOSITE PULL BOX (STREET LIGHTING)
	PROPOSED 24 X 36 X 36 - INCH COMPOSITE PULL BOX (COMMUNICATIONS)
	EXISTING COMMUNICATIONS PULL BOX
CIR 4	CIRCUIT NUMBER

CITY OF WAUWATOSA NUMBERING SCHEME

C-1-10
- POLE NUMBER
- CIRCUIT NUMBER
- CONTROL CABINET (SOURCE)

C-1-10JB
- PULL BOX NUMBER
- CIRCUIT NUMBER
- CONTROL CABINET (SOURCE)

DESCRIPTION

DATE

CITY OF WAUWATOSA
ENGINEERING SERVICES DIVISION

PROPOSED STREET LIGHTING

N 115th ST

FROM: W BLUE MOUND RD

TO: W UNDERWOOD PKWY

CONTRACT: 23-07
FILE NO: 23-275
DRAWN BY: WAT
CHECKED BY: WTW
SCALE:

E10

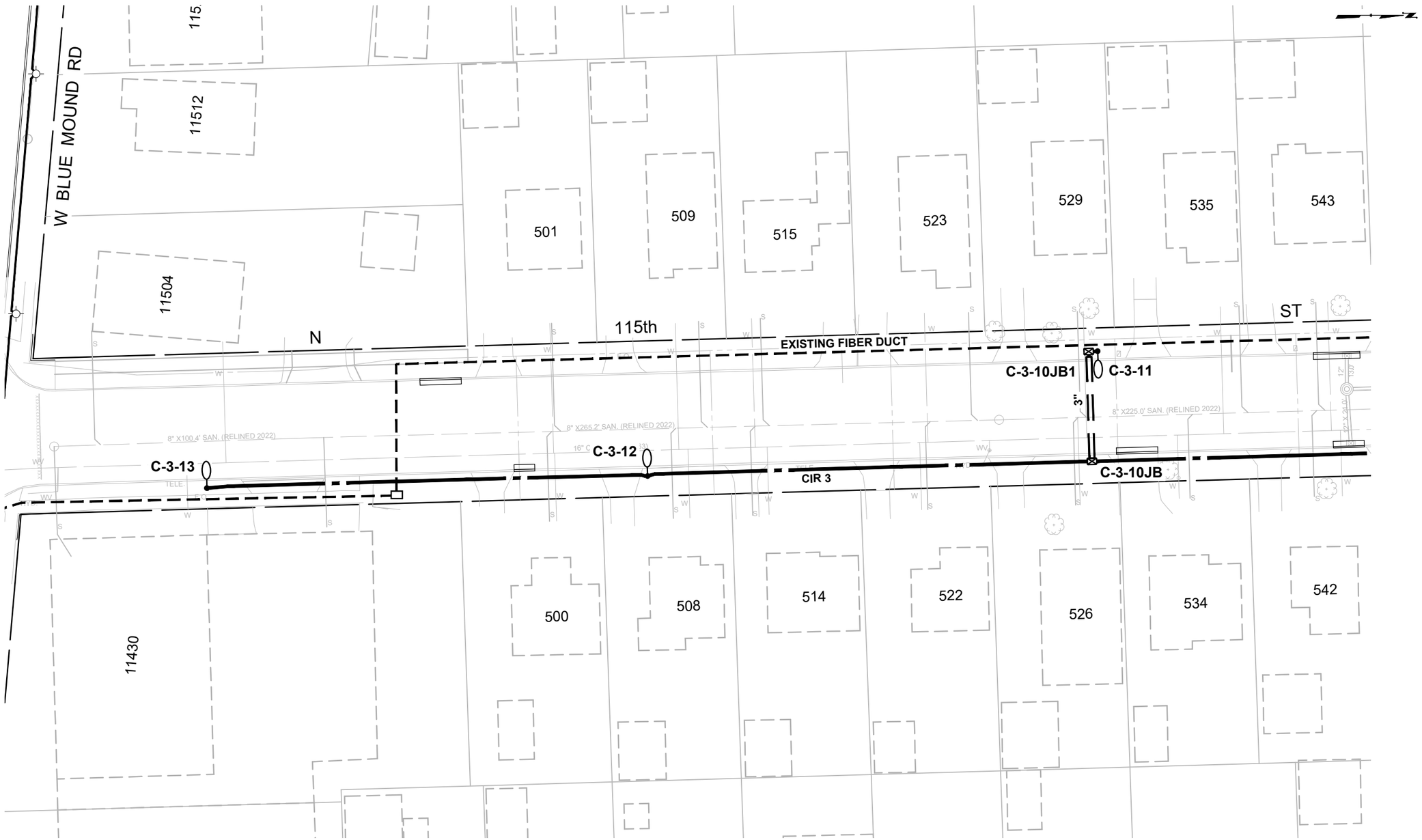

Underground utilities have been shown to a reasonable degree of accuracy using diggers hotline field locates and record drawings. However, the city does not guarantee their exact size, location or depth or that of others not shown. The contractor shall verify the existence of these utilities and those not shown. Costs for locating and delay shall be incidental to the contract.

DATE	DESCRIPTION

CITY OF WAUWATOSA
ENGINEERING SERVICES DIVISION

PROPOSED STREET LIGHTING

N 115th ST

FROM: W BLUE MOUND RD
TO: W UNDERWOOD PKWY

CONTRACT:	23-07
FILE NO:	23-275
DRAWN BY:	WAT
CHECKED BY:	WTW
SCALE:	1" = 40'

E11

FILE NAME : S:\DEPARTMENT FOLDERS\ENGINEERING\ACAD_PROJECTS\23-07 115TH STREET\DESIGN\N 115TH ST ELECTRICAL.DWG PLOT DATE : 4/12/2023 12:19 PM PLOT BY : WTREU

Underground utilities have been shown to a reasonable degree of accuracy using diggers hotline field locates and record drawings. However, the city does not guarantee their exact size, location or depth or that of others not shown. The contractor shall verify the existence of these utilities and those not shown. Costs for locating and delay shall be incidental to the contract.

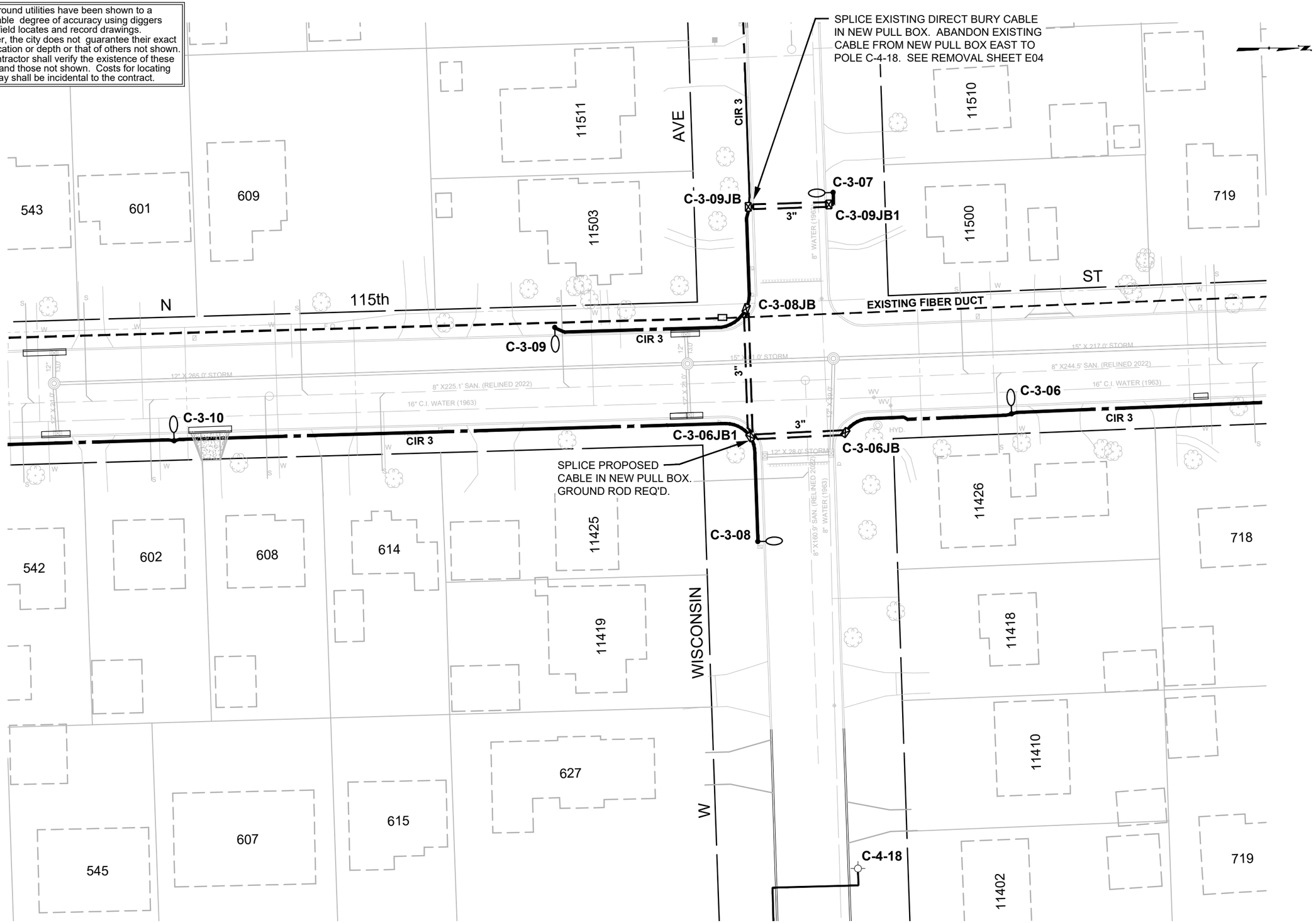

DATE	DESCRIPTION

CITY OF WAUWATOSA
ENGINEERING SERVICES DIVISION

PROPOSED STREET LIGHTING

N 115th ST

FROM: W BLUE MOUND RD TO: W UNDERWOOD PKWY

CONTRACT:	23-07
FILE NO:	23-275
DRAWN BY:	WAT
CHECKED BY:	WTW
SCALE:	1" = 40'

E12

FILE NAME : S:\DEPARTMENT FOLDERS\ENGINEERING\ACAD_PROJECTS\23-07 115TH STREET\DESIGN\N 115TH ST ELECTRICAL.DWG PLOT DATE : 4/12/2023 12:20 PM PLOT BY : WTREU

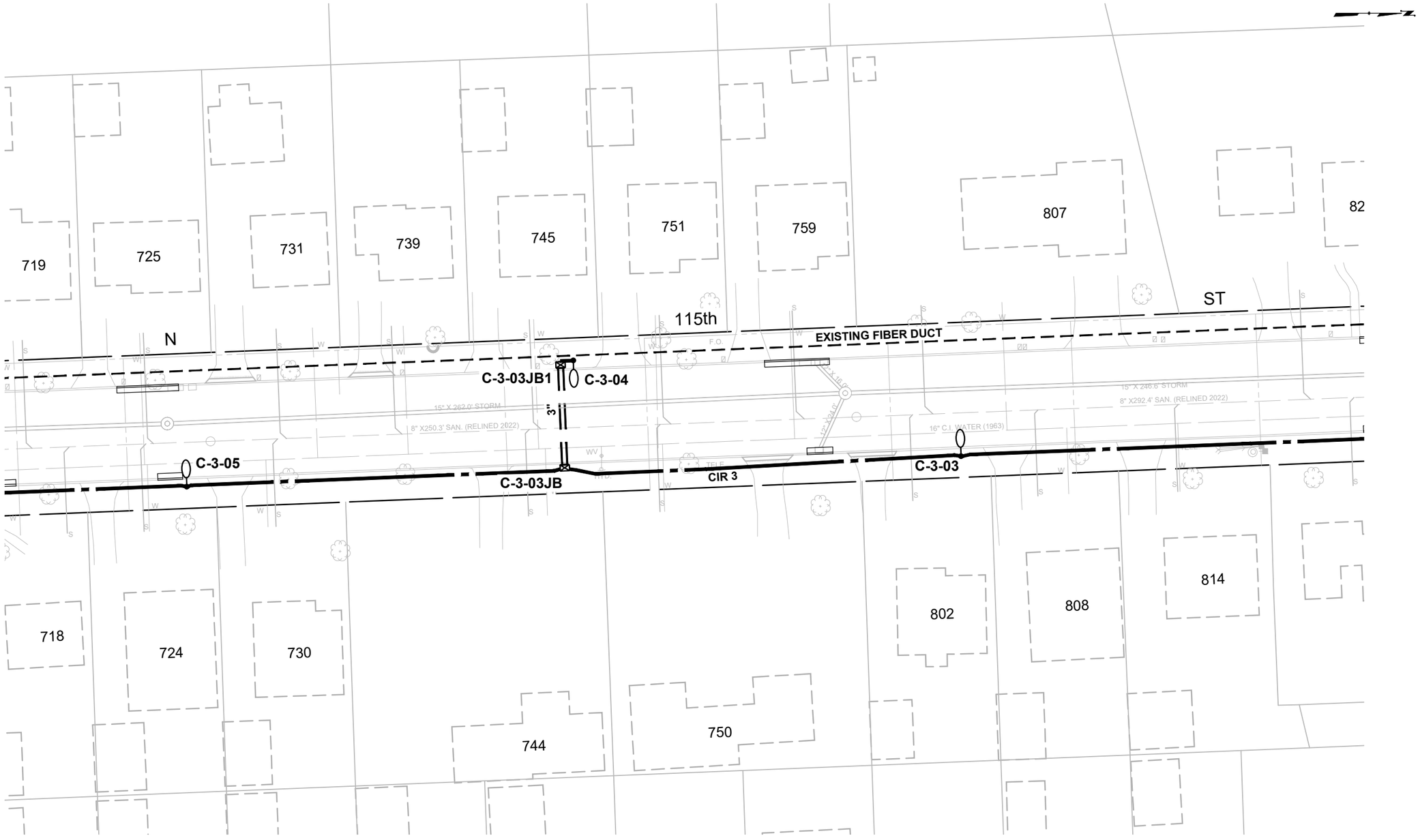

Underground utilities have been shown to a reasonable degree of accuracy using diggers hotline field locates and record drawings. However, the city does not guarantee their exact size, location or depth or that of others not shown. The contractor shall verify the existence of these utilities and those not shown. Costs for locating and delay shall be incidental to the contract.

DATE	DESCRIPTION

CITY OF WAUWATOSA
ENGINEERING SERVICES DIVISION

PROPOSED STREET LIGHTING

N 115th ST

FROM: W BLUE MOUND RD
TO: W UNDERWOOD PKWY

CONTRACT: 23-07
FILE NO: 23-275
DRAWN BY: WAT
CHECKED BY: WTW
SCALE: 1" = 40'

E13

FILE NAME : S:\DEPARTMENT FOLDERS\ENGINEERING\ACAD_PROJECTS\23-07 115TH STREET\DESIGN\N 115TH ST ELECTRICAL.DWG PLOT DATE : 4/12/2023 12:21 PM PLOT BY : WTREU

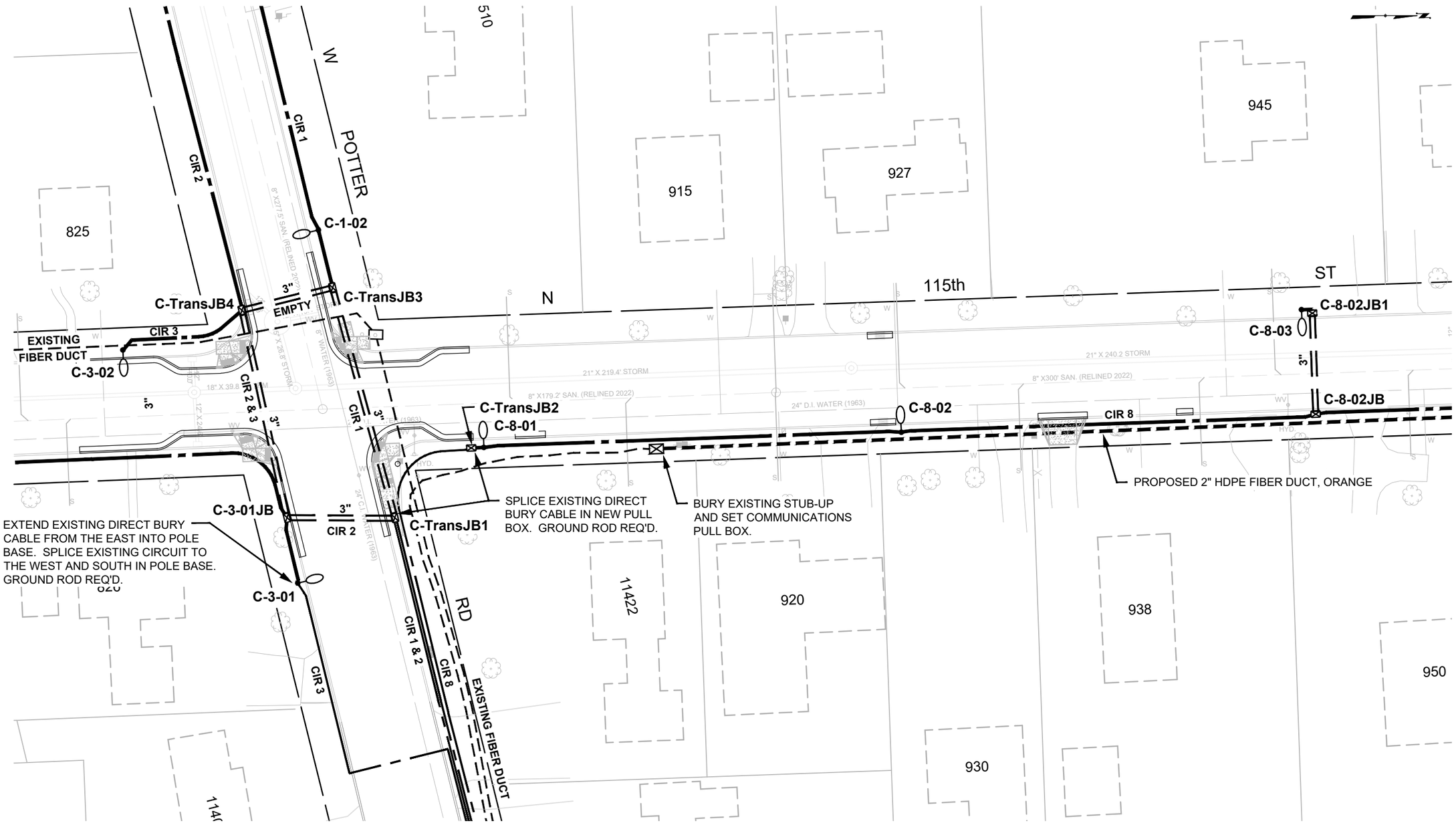

Underground utilities have been shown to a reasonable degree of accuracy using diggers hotline field locates and record drawings. However, the city does not guarantee their exact size, location or depth or that of others not shown. The contractor shall verify the existence of these utilities and those not shown. Costs for locating and delay shall be incidental to the contract.

DATE	DESCRIPTION

CITY OF WAUWATOSA
ENGINEERING SERVICES DIVISION

PROPOSED STREET LIGHTING

N 115th ST

FROM: W BLUE MOUND RD
TO: W UNDERWOOD PKWY

CONTRACT:	23-07
FILE NO:	23-275
DRAWN BY:	WAT
CHECKED BY:	WTW
SCALE:	1" = 40'

E14

FILE NAME : S:\DEPARTMENT FOLDERS\ENGINEERING\ACAD_PROJECTS\23-07 115TH STREET\DESIGN\N 115TH ST ELECTRICAL.DWG PLOT DATE : 4/12/2023 12:24 PM PLOT BY : WTREU

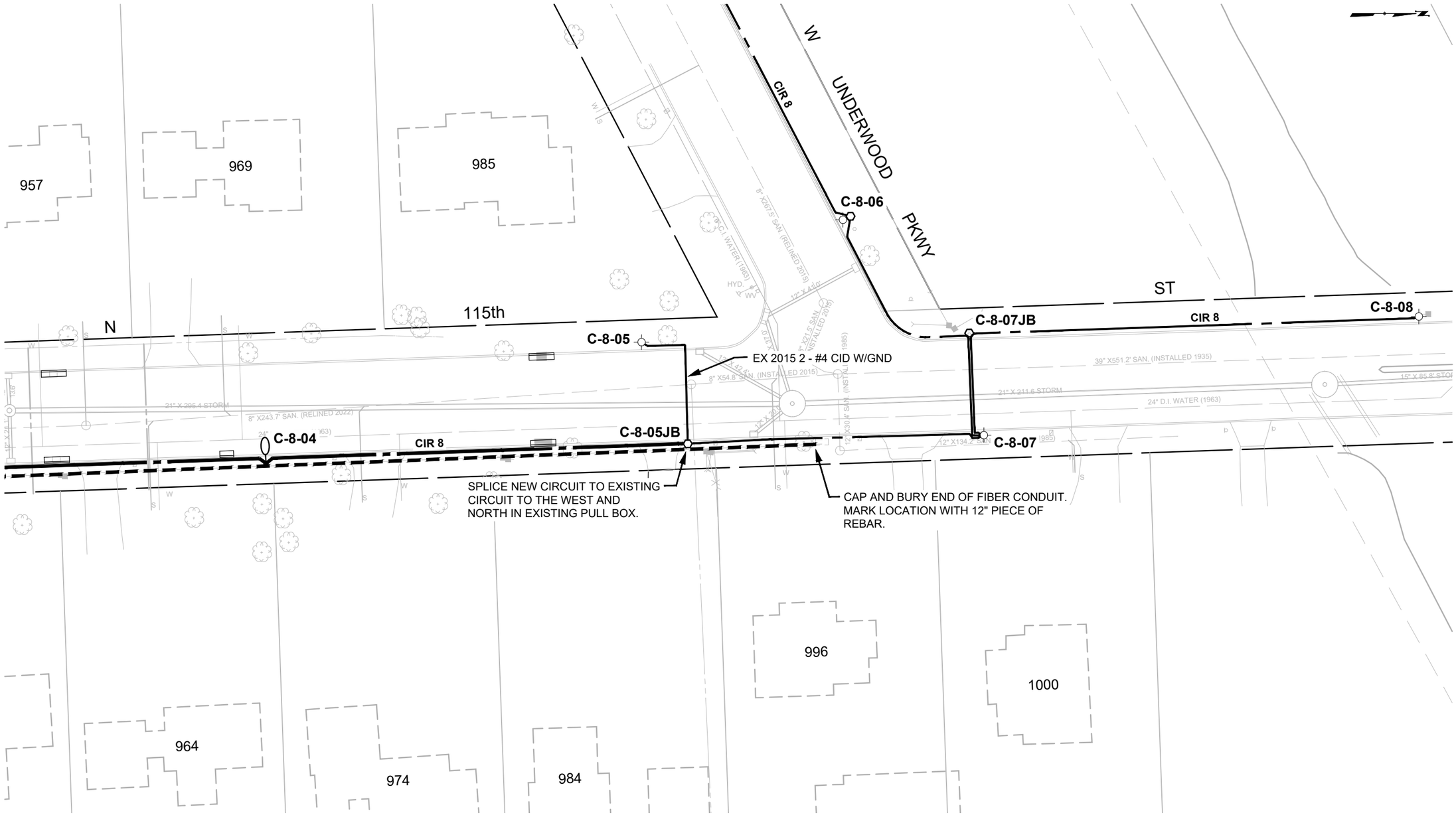

Underground utilities have been shown to a reasonable degree of accuracy using diggers hotline field locates and record drawings. However, the city does not guarantee their exact size, location or depth or that of others not shown. The contractor shall verify the existence of these utilities and those not shown. Costs for locating and delay shall be incidental to the contract.

DATE	DESCRIPTION

CITY OF WAUWATOSA
ENGINEERING SERVICES DIVISION

PROPOSED STREET LIGHTING

N 115th ST

FROM: W BLUE MOUND RD
TO: W UNDERWOOD PKWY

CONTRACT:	23-07
FILE NO:	23-275
DRAWN BY:	WAT
CHECKED BY:	WTW
SCALE:	1" = 40'

E15

FILE NAME : S:\DEPARTMENT FOLDERS\ENGINEERING\ACAD_PROJECTS\23-07 115TH STREET\DESIGN\N 115TH ST ELECTRICAL.DWG PLOT DATE : 4/12/2023 12:24 PM PLOT BY : WTREU

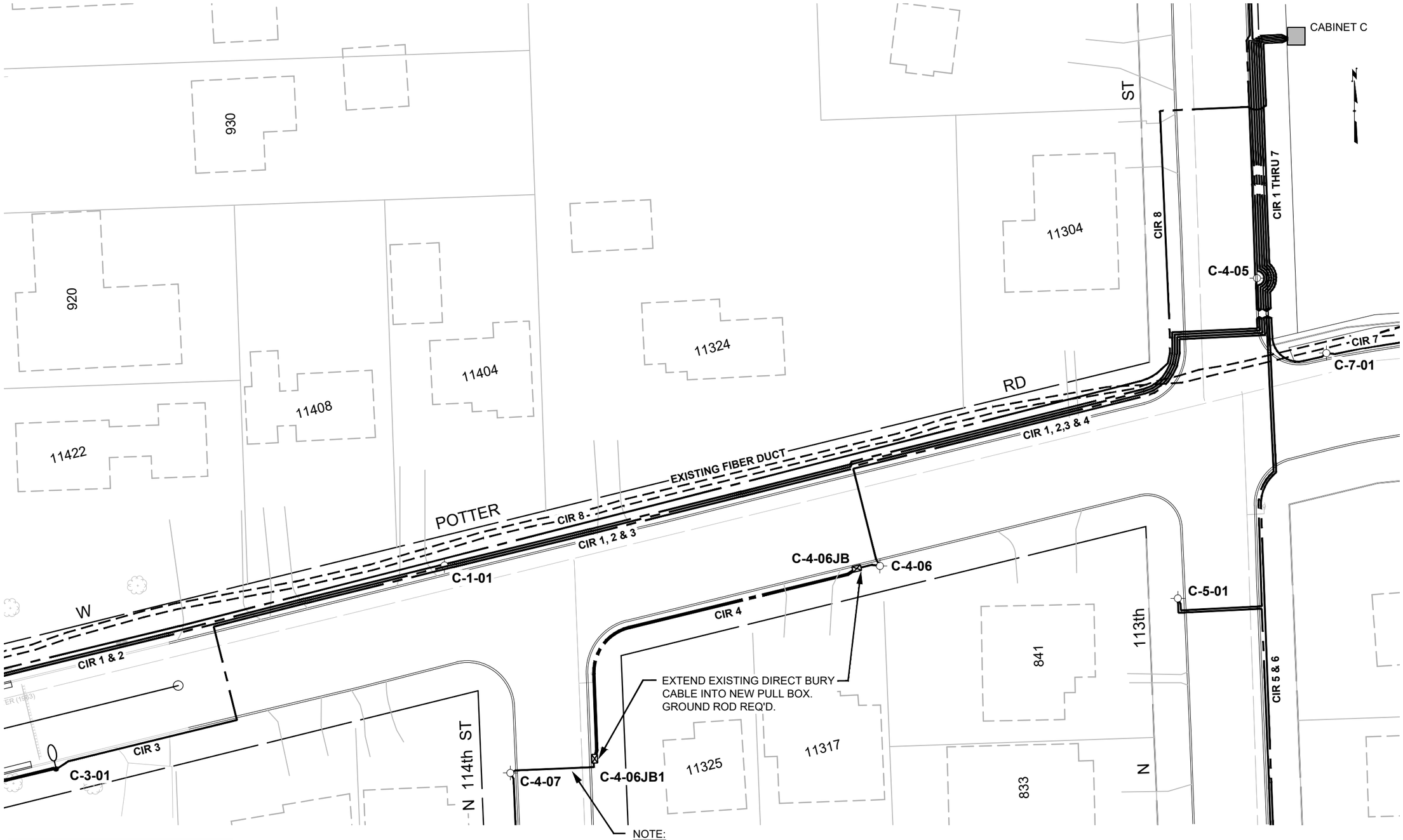

NOTE:
THIS CIRCUIT IS TEMPORARILY BACK FED FROM THE SOUTH. NOTIFY THE CITY ELECTRICAL MAINTENANCE THREE WORKING DAYS PRIOR TO MAKING SPLICES SO CREWS CAN REMOVE TEMPORARY BACK FEED.

Underground utilities have been shown to a reasonable degree of accuracy using diggers hotline field locates and record drawings. However, the city does not guarantee their exact size, location or depth or that of others not shown. The contractor shall verify the existence of these utilities and those not shown. Costs for locating and delay shall be incidental to the contract.

DATE	DESCRIPTION

CITY OF WAUWATOSA
ENGINEERING SERVICES DIVISION

PROPOSED STREET LIGHTING

W POTTER RD

FROM: N 113th ST
TO: N 116th ST

CONTRACT:	23-07
FILE NO:	23-275
DRAWN BY:	WAT
CHECKED BY:	WTW
SCALE:	1" = 40'

E16

FILE NAME : S:\DEPARTMENT FOLDERS\ENGINEERING\ACAD_PROJECTS\23-07 115TH STREET\DESIGN\N 115TH ST ELECTRICAL.DWG PLOT DATE : 4/12/2023 12:25 PM PLOT BY : WTREU

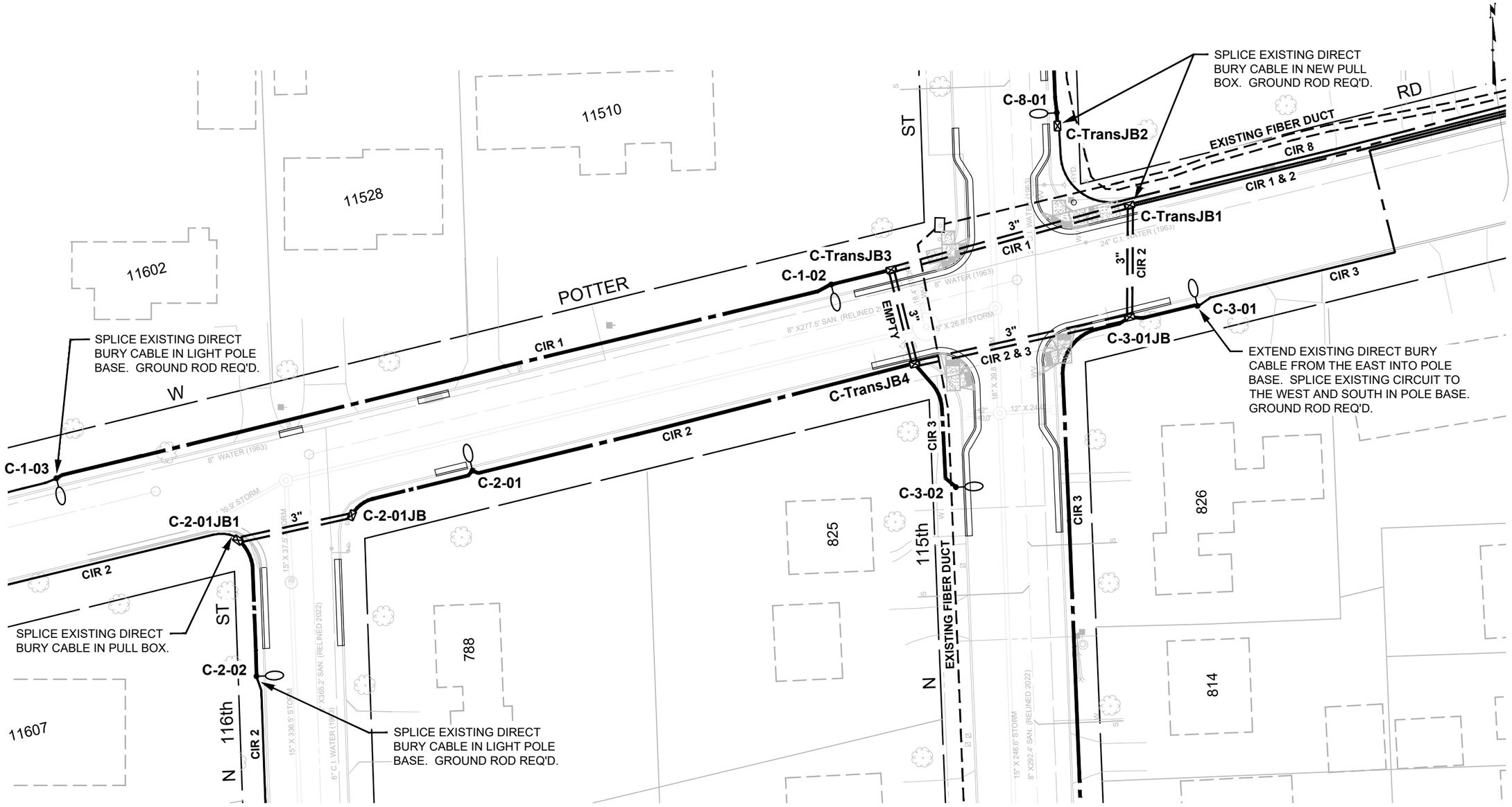

Underground utilities have been shown to a reasonable degree of accuracy using diggers hotline field locates and record drawings. However, the city does not guarantee their exact size, location or depth or that of others not shown. The contractor shall verify the existence of these utilities and those not shown. Costs for locating and delay shall be incidental to the contract.

DATE	DESCRIPTION

CITY OF WAUWATOSA
ENGINEERING SERVICES DIVISION

STREET LIGHTING REMOVALS

N 115th ST

FROM: W BLUE MOUND RD TO: W UNDERWOOD PKWY

CONTRACT:	23-07
FILE NO:	23-275
DRAWN BY:	WAT
CHECKED BY:	WTW
SCALE:	1" = 40'

E17

FILE NAME : S:\DEPARTMENT FOLDERS\ENGINEERING\ACAD_PROJECTS\23-07 115TH STREET\DESIGN\N 115TH ST ELECTRICAL.DWG PLOT DATE : 4/12/2023 12:29 PM PLOT BY : WTREU

NO WORK ON THIS PAGE - FOR INFORMATIONAL PURPOSES ONLY

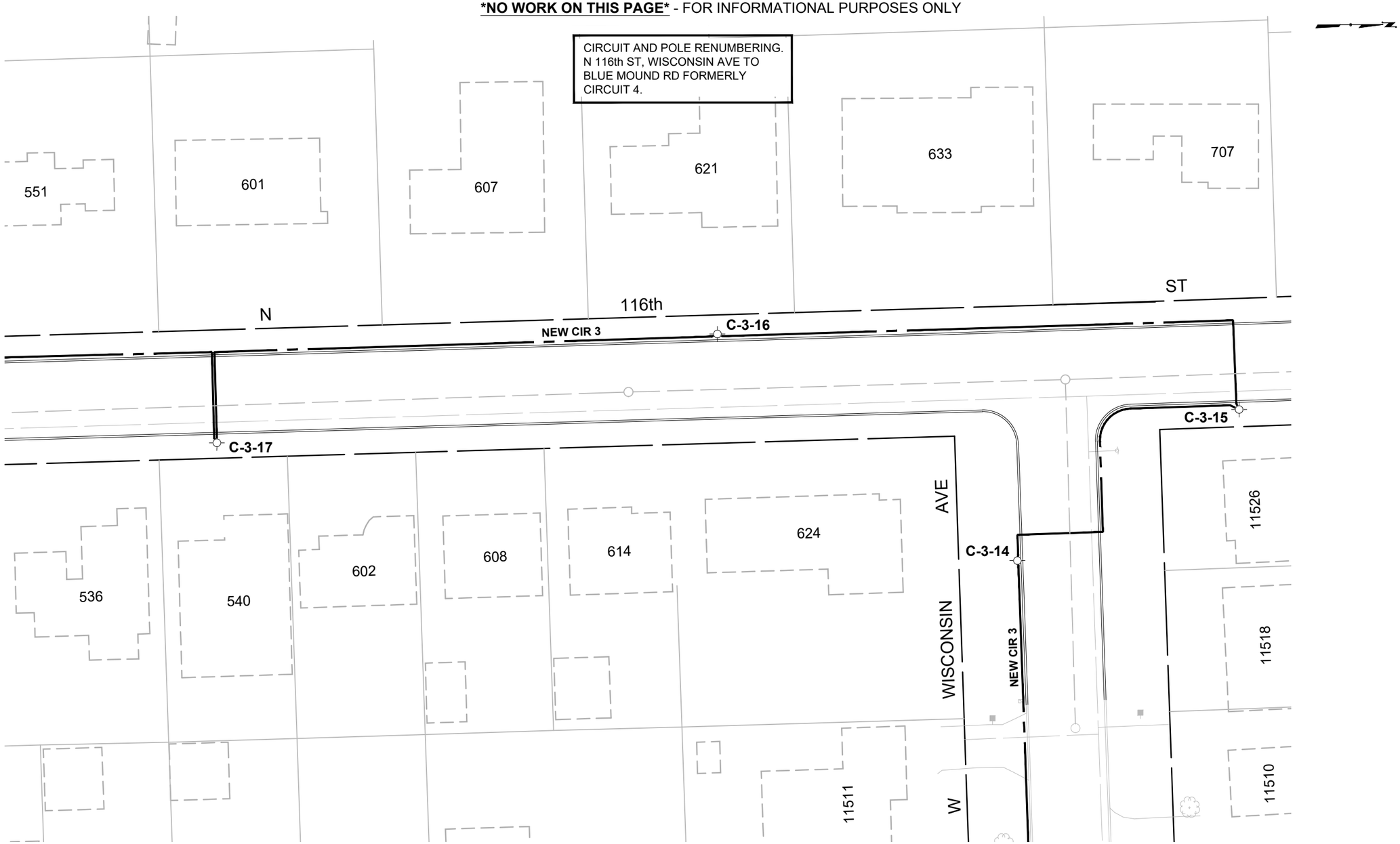

Underground utilities have been shown to a reasonable degree of accuracy using diggers hotline field locates and record drawings. However, the city does not guarantee their exact size, location or depth or that of others not shown. The contractor shall verify the existence of these utilities and those not shown. Costs for locating and delay shall be incidental to the contract.

DATE	DESCRIPTION

CITY OF WAUWATOSA
ENGINEERING SERVICES DIVISION

PROPOSED STREET LIGHTING

N 115th ST

FROM: W BLUE MOUND RD TO: W UNDERWOOD PKWY

CONTRACT:	23-07
FILE NO:	23-275
DRAWN BY:	WAT
CHECKED BY:	WTW
SCALE:	1" = 40'

E18

FILE NAME : S:\DEPARTMENT FOLDERS\ENGINEERING\ACAD_PROJECTS\23-07 115TH STREET\DESIGN\N 115TH ST ELECTRICAL.DWG PLOT DATE : 4/12/2023 12:29 PM PLOT BY : WTREU

NO WORK ON THIS PAGE - FOR INFORMATIONAL PURPOSES ONLY

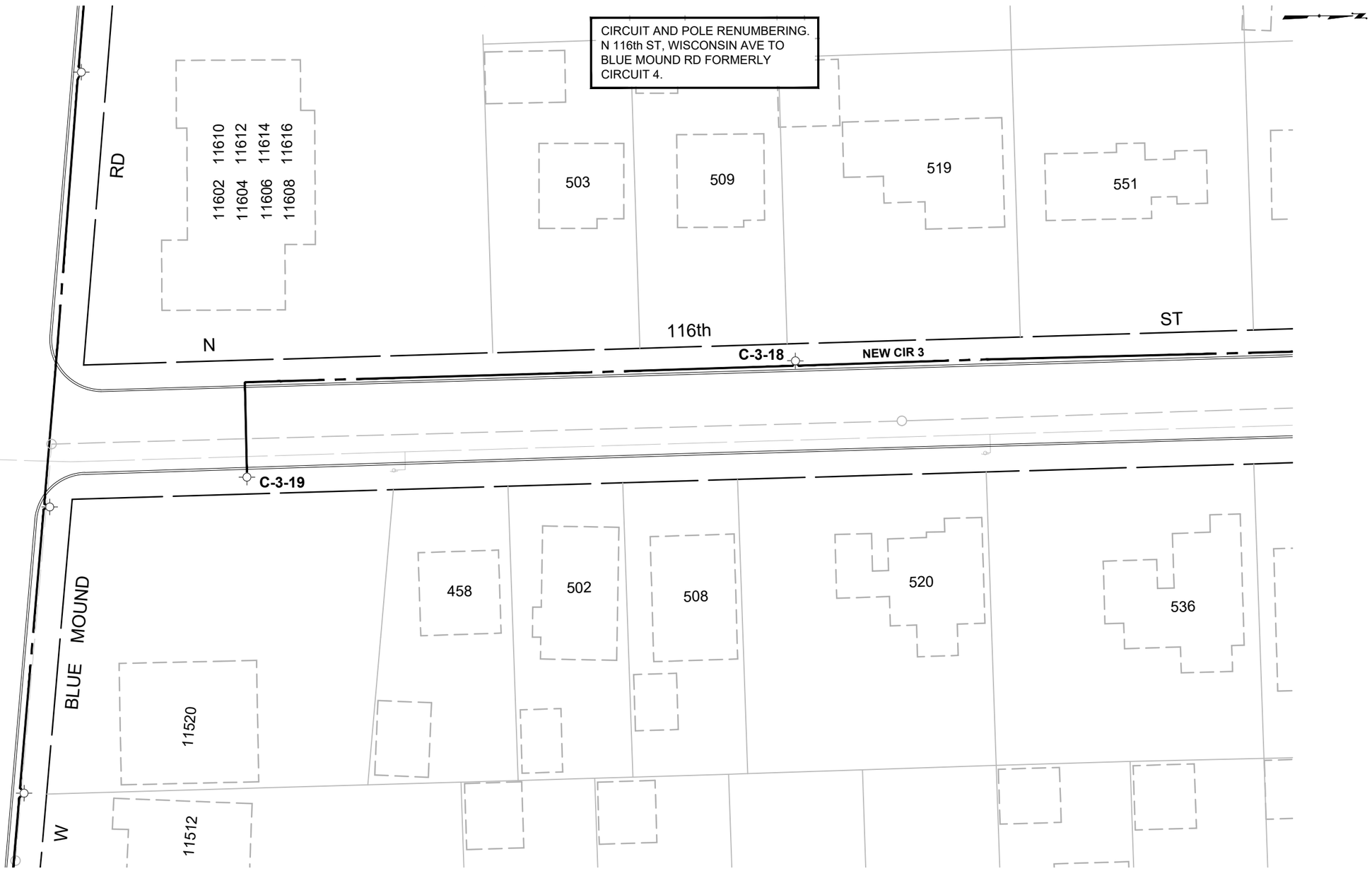

Underground utilities have been shown to a reasonable degree of accuracy using diggers hotline field locates and record drawings. However, the city does not guarantee their exact size, location or depth or that of others not shown. The contractor shall verify the existence of these utilities and those not shown. Costs for locating and delay shall be incidental to the contract.

DATE	DESCRIPTION

CITY OF WAUWATOSA
ENGINEERING SERVICES DIVISION

PROPOSED STREET LIGHTING

N 115th ST

FROM: W BLUE MOUND RD TO: W UNDERWOOD PKWY

CONTRACT:	23-07
FILE NO:	23-275
DRAWN BY:	WAT
CHECKED BY:	WTW
SCALE:	1" = 40'

E19

FILE NAME : S:\DEPARTMENT FOLDERS\ENGINEERING\ACAD_PROJECTS\23-07 115TH STREET\DESIGN\N 115TH ST ELECTRICAL.DWG PLOT DATE : 4/12/2023 12:30 PM PLOT BY : WTREU

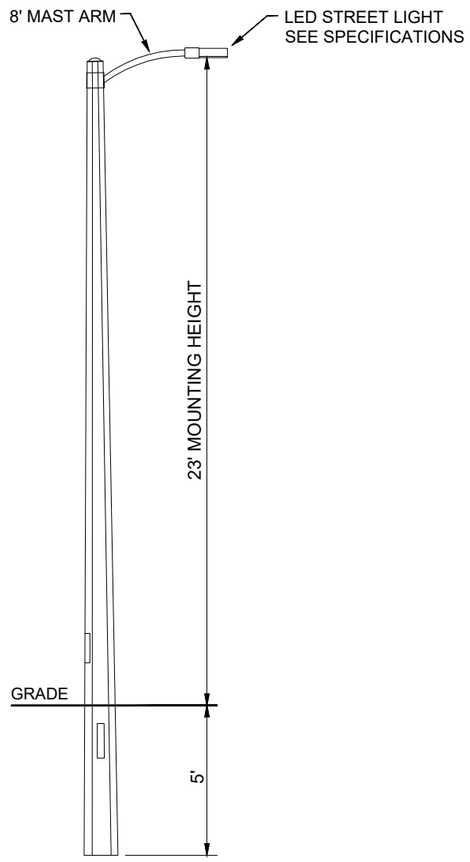

CONCRETE POLE DETAIL

NTS

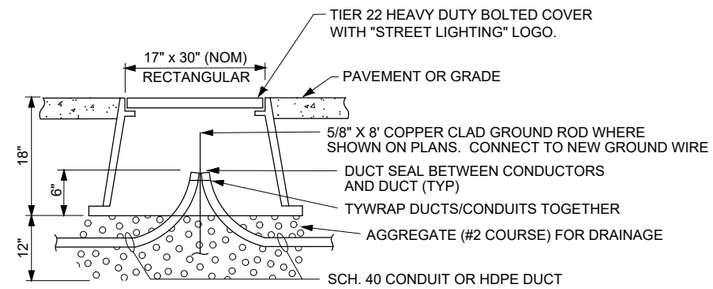

NOTE:

1. PULL BOX IS A UL (PT1730BA18) LISTED CONCRETE COMPOSITE
2. INCOMING LINE SIDE CONDUCTORS SHALL BE MARKED WITH BLUE TAPE
3. CONTRACTOR TO PROVIDE 10' OF SLACK ON ALL CONDUCTORS IN PULL BOX

PULL BOX (IN CONCRETE)

NTS

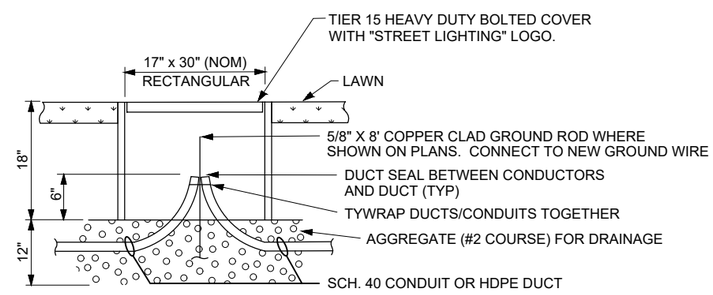

NOTE:

1. PULL BOX IS A UL (PT1730BA18) LISTED CONCRETE COMPOSITE
2. INCOMING LINE SIDE CONDUCTORS SHALL BE MARKED WITH BLUE TAPE
3. CONTRACTOR TO PROVIDE 10' OF SLACK ON ALL CONDUCTORS IN PULL BOX

PULL BOX (IN GRASS)

NTS

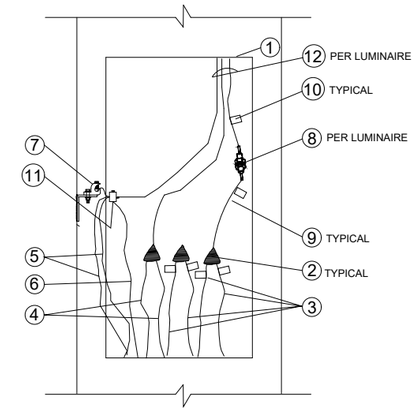

1. HANDHOLE AND COVER
2. INSULATED SPLICE
3. UNGROUNDED CONDUCTORS
4. GROUNDED CONDUCTORS
5. SYSTEM GROUNDING CONDUCTORS
6. GROUND CONDUCTOR TO GROUND ROD
7. HANDHOLE GROUNDING LUG
8. INLINE FUSE ASSEMBLY W/5A KTK FUSE WITH WEATHERPROOF BOOTS
9. 12" PIGTAIL BETWEEN SPLICE AND FUSE ASSEMBLY
10. CIRCUIT TAG
11. REVERSIBLE PRESSURE OR COMPRESSION GROUNDING CONNECTION (NOT INSULATED)
12. 3#12 RHW/USE TO LUMINAIRE

STANDARD POLE WIRING DETAIL

NTS

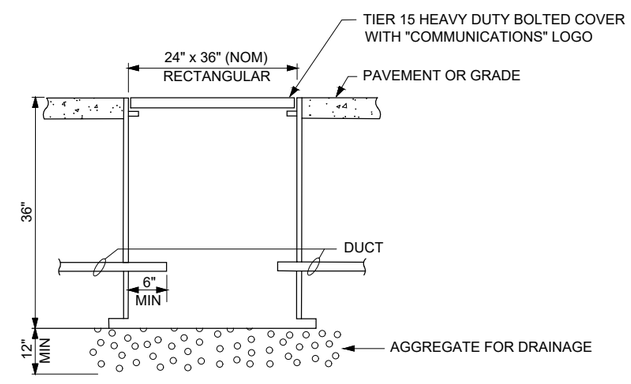

NOTE:

1. PULL BOX IS A UL LISTED CONCRETE COMPOSITE

COMMUNICATIONS PULL BOX

NTS

DATE	DESCRIPTION

CITY OF WAUWATOSA
ENGINEERING SERVICES DIVISION

STREET LIGHTING DETAILS

CONTRACT: 23-07
FILE NO: 23-275
DRAWN BY: WAT
CHECKED BY: WTW
SCALE:

E20

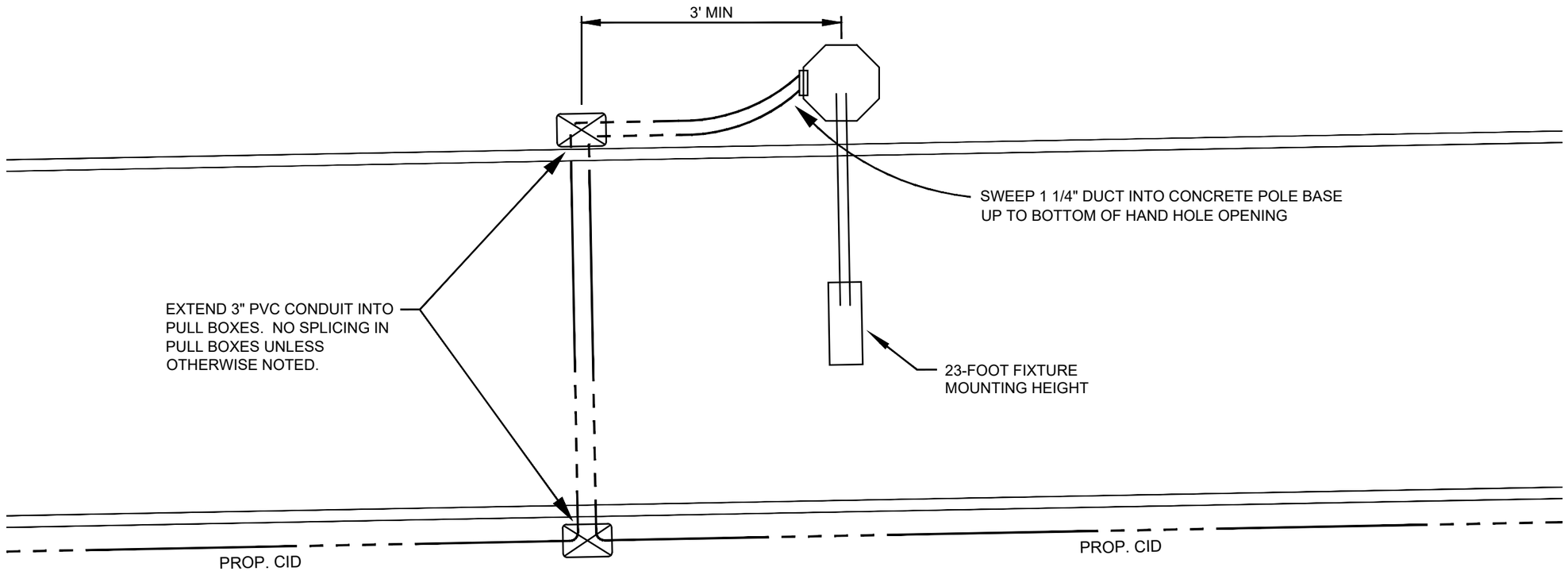

CONDUIT CROSSING DETAIL

NTS

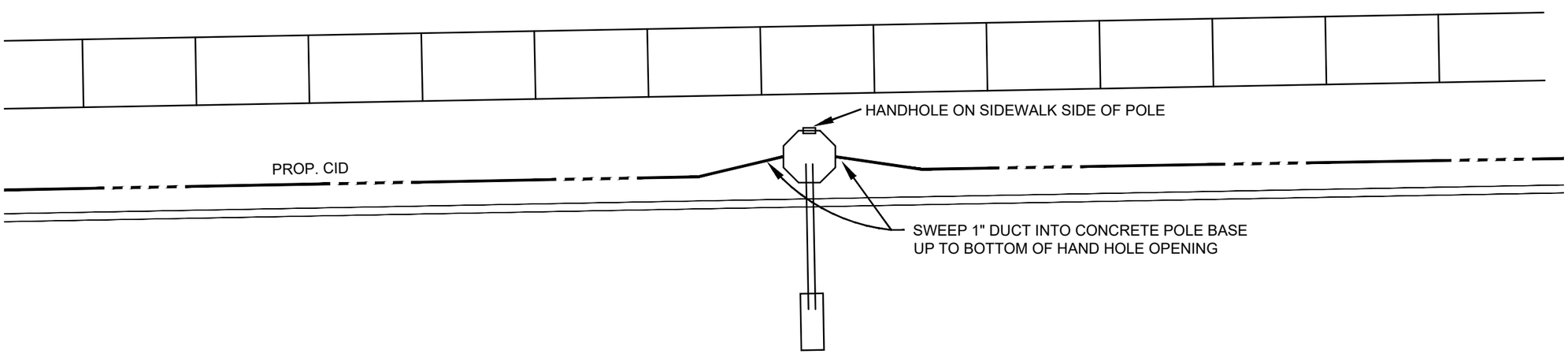

1" CONDUIT CONNECTION TO POLE

NTS

DATE	DESCRIPTION

CITY OF WAUWATOSA
ENGINEERING SERVICES DIVISION

STREET LIGHTING DETAILS

CONTRACT:	23-07
FILE NO:	23-275
DRAWN BY:	WAT
CHECKED BY:	WTW
SCALE:	

E21

FILE NAME : S:\DEPARTMENT FOLDERS\ENGINEERING\ACAD_PROJECTS\23-07 115TH STREET\DESIGN\N 115TH ST ELECTRICAL.DWG PLOT DATE : 4/12/2023 12:30 PM PLOT BY : WTREU

GENERAL NOTES

1. CONTRACTOR TO REMOVE SIGNS, POSTS AND ALL RELATED HARDWARE AND DELIVER TO THE CITY OF WAUWATOSA PUBLIC WORKS YARD LOCATED AT 11100 W WALNUT ROAD, WAUWATOSA, WI 53226. CONTACT RANDY MICHELZ, TRAFFIC AND ELECTRICAL SUPERINTENDENT AT (414)-471-8429.

LOCATION MAP

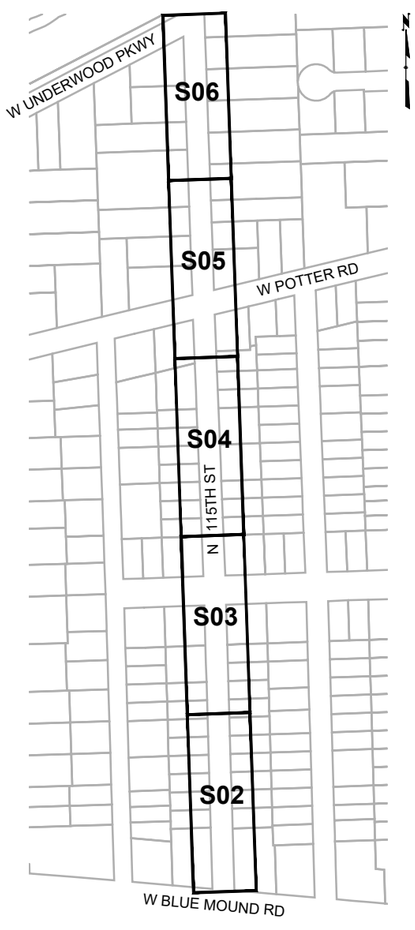

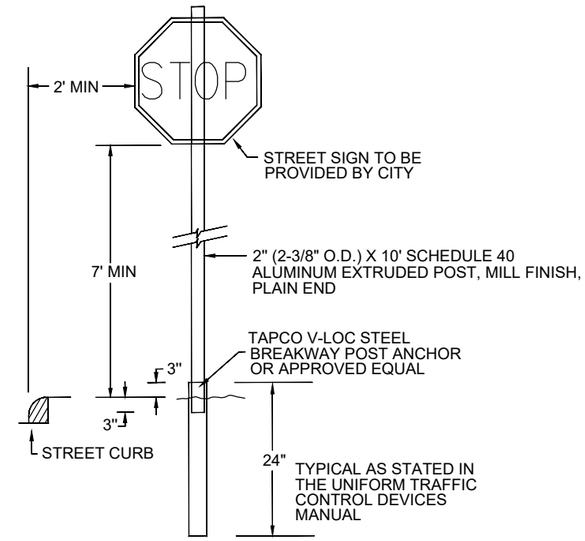

TYPICAL SIGN DETAIL
NTS

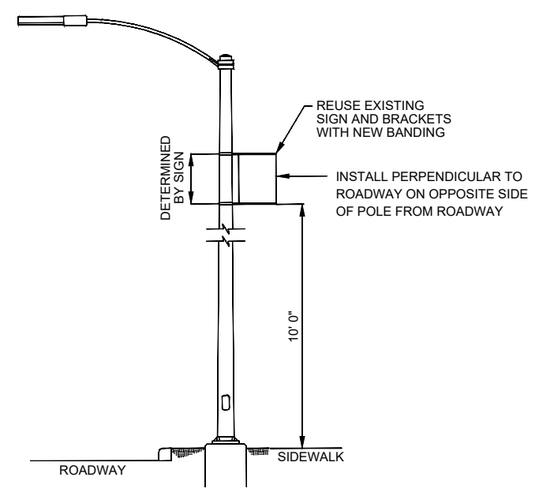

BANNER SIGN ON LIGHT POLE
NTS

DATE	DESCRIPTION

CITY OF WAUWATOSA
ENGINEERING SERVICES DIVISION

PROPOSED SIGN PLAN

N 115th ST

FROM: W BLUE MOUND RD
TO: W UNDERWOOD PKWY

CONTRACT: 23-07
FILE NO:
DRAWN BY: WAT
CHECKED BY: MJA
SCALE:

S01

DATE	DESCRIPTION

CITY OF WAUWATOSA
ENGINEERING SERVICES DIVISION

PROPOSED SIGN PLAN

N 115th ST

FROM: W BLUE MOUND RD
TO: W UNDERWOOD PKWY

CONTRACT: 23-07
FILE NO:
DRAWN BY: WAT
CHECKED BY: MJA
SCALE: 1" = 40'

S02

FILE NAME : S:\DEPARTMENT FOLDERS\ENGINEERING\ACAD_PROJECTS\23-07 115TH STREET\DESIGN\N 115TH ST SIGN PLAN.DWG PLOT DATE : 3/21/2023 2:12 PM PLOT BY : WTREU

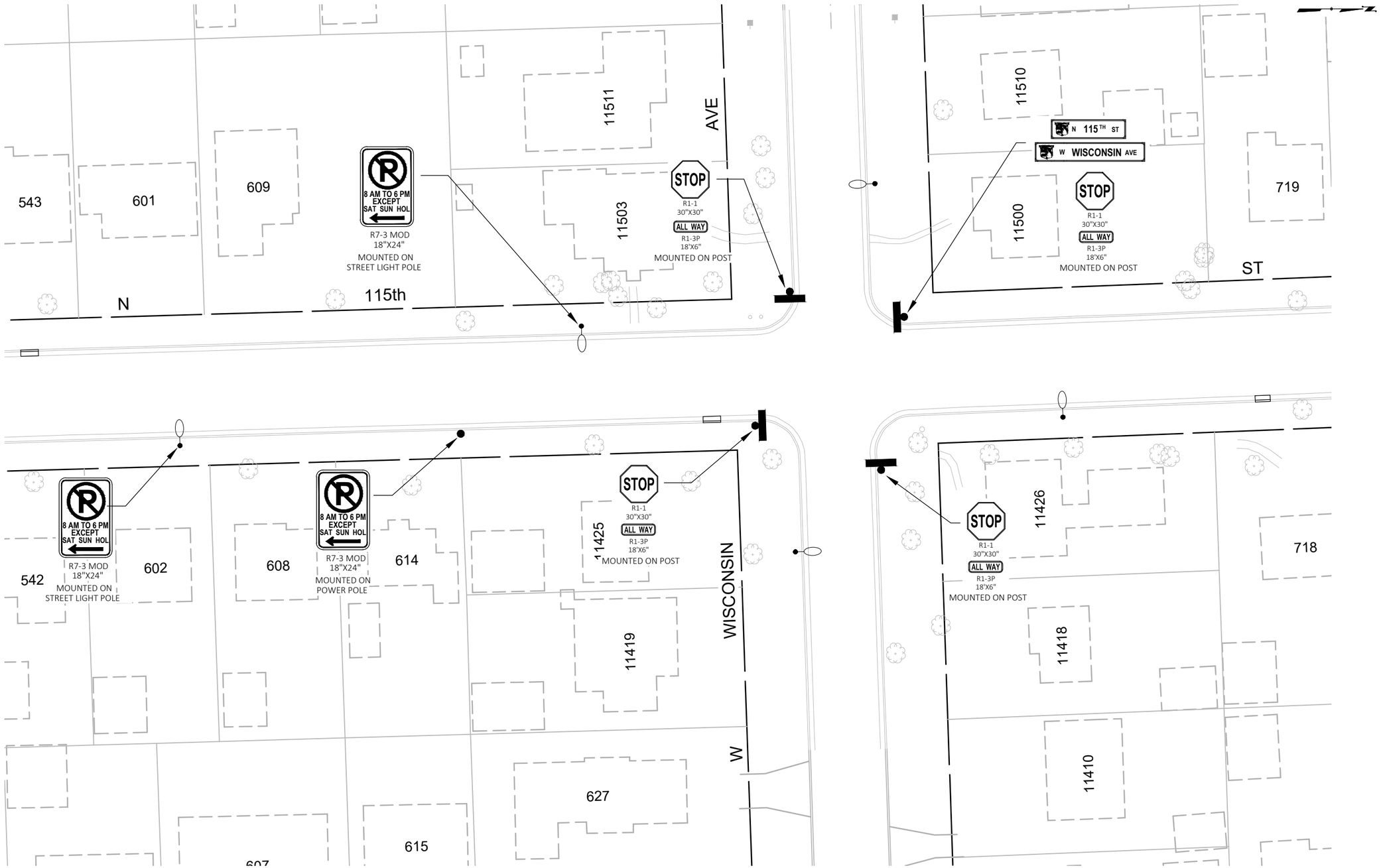

DESCRIPTION

DATE

CITY OF WAUWATOSA

ENGINEERING SERVICES DIVISION

PROPOSED SIGN PLAN

N 115th ST

FROM: W BLUE MOUND RD

TO: W UNDERWOOD PKWY

CONTRACT:	23-07
FILE NO:	
DRAWN BY:	WAT
CHECKED BY:	MJA
SCALE:	1" = 40'

S03

FILE NAME : S:\DEPARTMENT FOLDERS\ENGINEERING\ACAD_PROJECTS\23-07 115TH STREET\DESIGN\N 115TH ST SIGN PLAN.DWG PLOT DATE : 3/21/2023 2:12 PM PLOT BY : WTREU

DATE	DESCRIPTION

CITY OF WAUWATOSA
ENGINEERING SERVICES DIVISION

PROPOSED SIGN PLAN

N 115th ST

FROM: W BLUE MOUND RD
TO: W UNDERWOOD PKWY

CONTRACT:	23-07
FILE NO:	
DRAWN BY:	WAT
CHECKED BY:	MJA
SCALE:	1" = 40'

S04

FILE NAME : S:\DEPARTMENT FOLDERS\ENGINEERING\ACAD_PROJECTS\23-07 115TH STREET\DESIGN\N 115TH ST SIGN PLAN.DWG PLOT DATE : 3/21/2023 2:13 PM PLOT BY : WTREU

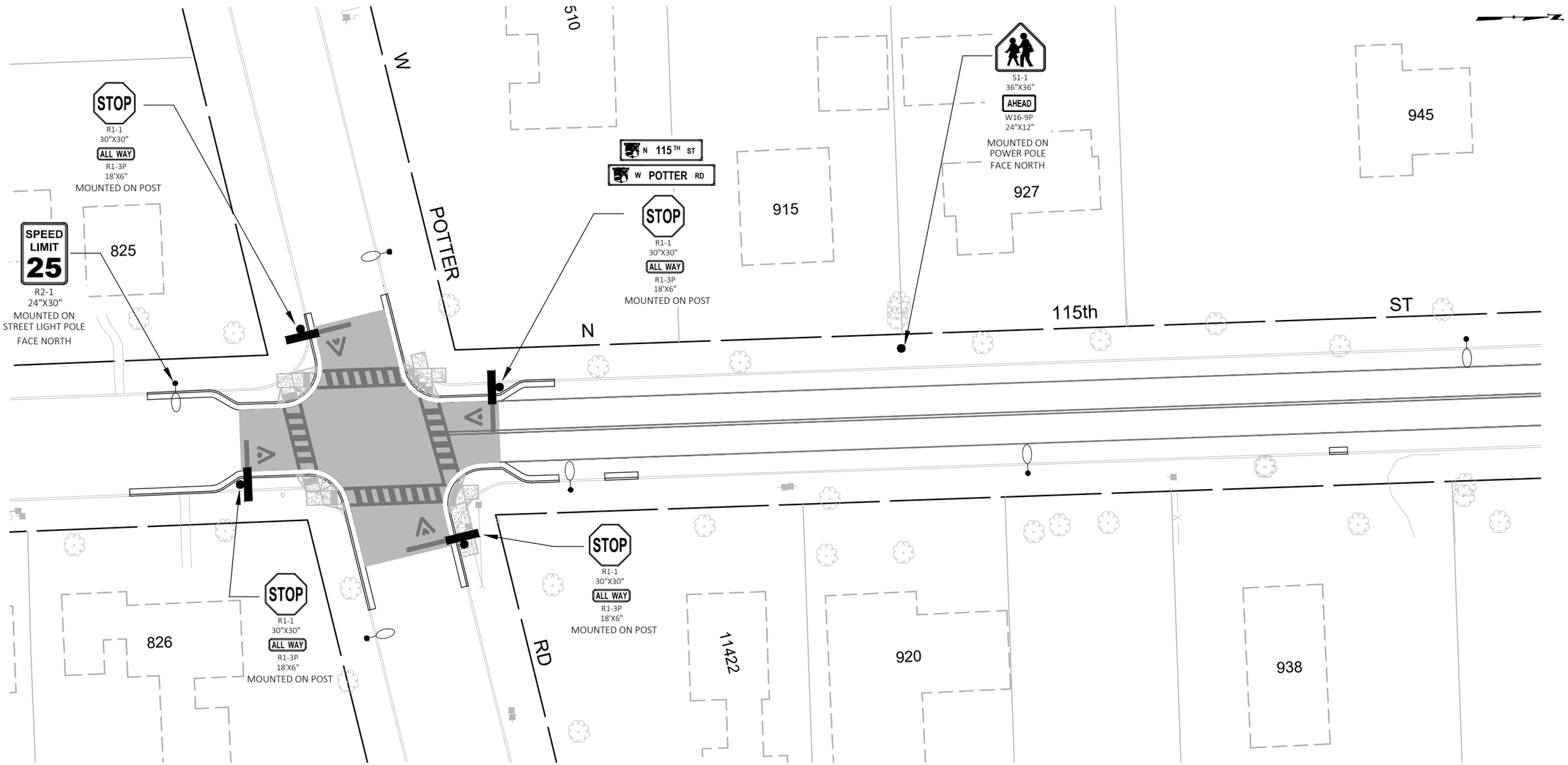

DESCRIPTION

DATE

CITY OF WAUWATOSA
ENGINEERING SERVICES DIVISION

PROPOSED SIGN PLAN

N 115th ST

FROM: W BLUE MOUND RD

TO: W UNDERWOOD PKWY

CONTRACT:	23-07
FILE NO:	
DRAWN BY:	WAT
CHECKED BY:	MJA
SCALE:	1" = 40'

S05

FILE NAME : S:\DEPARTMENT FOLDERS\ENGINEERING\ACAD_PROJECTS\23-07 115TH STREET\DESIGN\N 115TH ST SIGN PLAN.DWG PLOT DATE : 3/21/2023 2:20 PM PLOT BY : WTREU

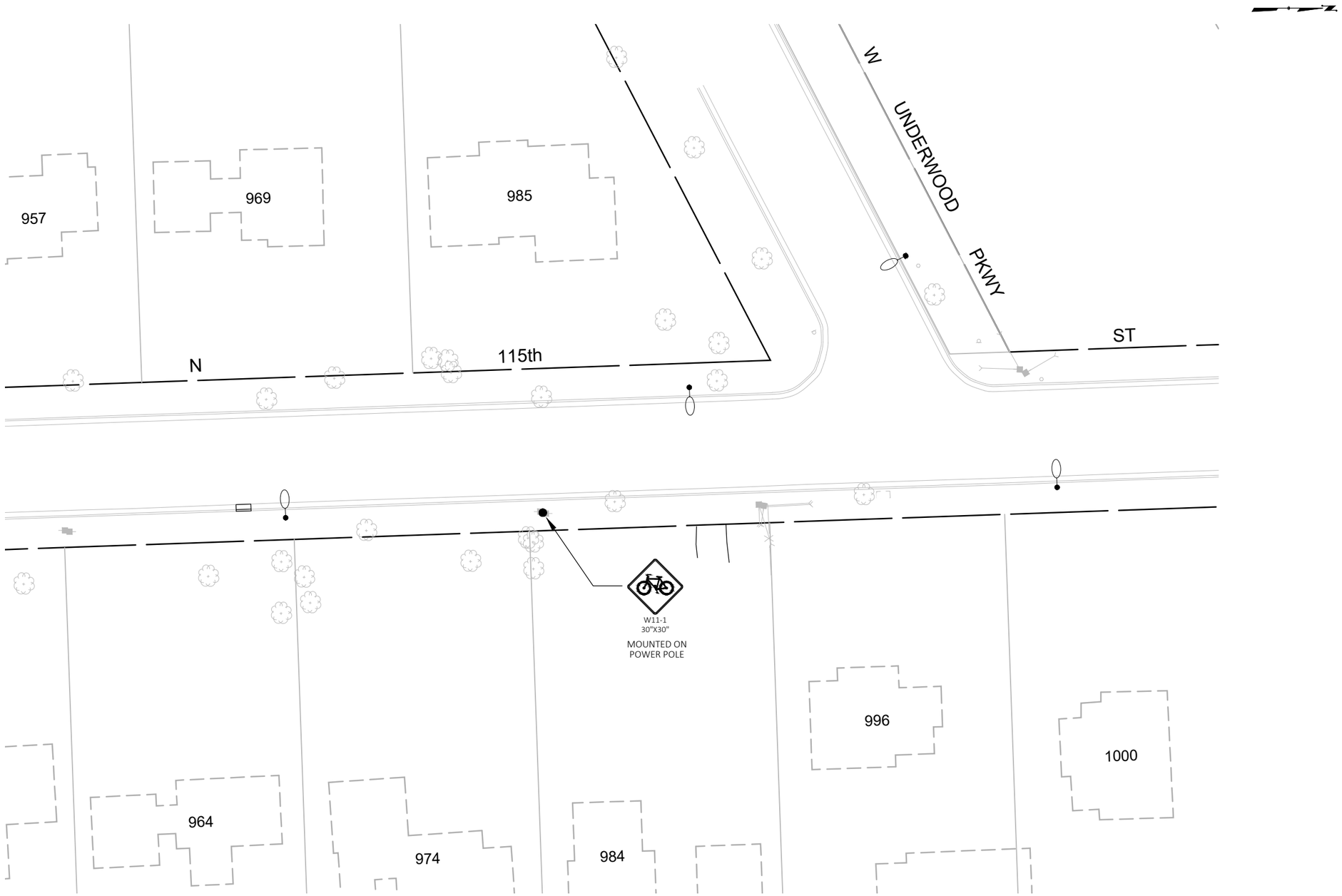

DATE	DESCRIPTION

CITY OF WAUWATOSA
ENGINEERING SERVICES DIVISION

PROPOSED SIGN PLAN

N 115th ST

FROM: W BLUE MOUND RD
TO: W UNDERWOOD PKWY

CONTRACT:	23-07
FILE NO:	
DRAWN BY:	WAT
CHECKED BY:	MJA
SCALE:	1" = 40'

S06

FILE NAME : S:\DEPARTMENT FOLDERS\ENGINEERING\ACAD_PROJECTS\23-07 115TH STREET\DESIGN\N 115TH ST SIGN PLAN.DWG PLOT DATE : 3/21/2023 2:14 PM PLOT BY : WTREU

GENERAL NOTES

1. ALL TRAFFIC CONTROL SHALL BE IN ACCORDANCE WITH THE REQUIREMENTS OF PART 6 OF THE MANUAL OF UNIFORM TRAFFIC CONTROL DEVICES, 2009 EDITION WITH WISCONSIN DOT SUPPLEMENT. THE CONTRACTOR SHALL BE RESPONSIBLE FOR PROVIDING ADEQUATE BARRICADES, SIGNS, AND OTHER DEVICES NECESSARY TO PROTECT THE WORK ZONE, THE MOTORING PUBLIC, AND PEDESTRIANS. TEMPORARY "NO PARKING" SIGNS, TYPES 1-3, MAY BE NON-REFLECTIVE ON FOAM BOARD.

2. AT NO TIME SHALL ANY HAULING, STAGING, OR DELIVERIES BE ALLOWED ON UNDERWOOD PARKWAY, INCLUDING DURING WORK CONDUCTED ON OR NEAR THE PARKWAY. WHERE THE PLANS SHOW THE CONTRACTOR MUST WORK WITHIN OR DIRECTLY ADJACENT TO THE PARKWAY, CONSTRUCTION ACCESS OF EQUIPMENT AND WORKERS SHALL BE RESTRICTED AS CLOSELY TO THE IMMEDIATE, ACTIVE WORK AREA AS MUCH AS PRACTICABLE.

3. STAGING OF SUPPLIES AND EQUIPMENT SHALL ONLY BE ALLOWED ON STREETS AS SHOWN ON THIS SHEET. A MINIMUM OF ONE 12-FOOT TRAVEL LANE SHALL BE MAINTAINED ADJACENT TO ANY STAGING AREA AT ALL TIMES. ANY AREA USED FOR STAGING SHALL ALSO INCLUDE TYPE 1 PARKING SIGNS EVERY 100-FEET FOR THE DURATION THE AREA IS USED FOR MATERIAL STORAGE OR OVERNIGHT EQUIPMENT STORAGE. AT NO TIME SHALL STAGING BE ALLOWED TO BLOCK ANY DRIVEWAY OR INTERSECTION.

4. THE CONTRACTOR SHALL USE TYPE 2 PARKING SIGNS AT LOCATIONS FOR WHICH ONLY DAYTIME ACCESS IS REQUIRED, IN ORDER TO FACILITATE OVERNIGHT PARKING FOR RESIDENTS AS MUCH AS PRACTICABLE. TYPE 3 SIGNS SHALL ONLY BE USED WHEN THE CONTRACTOR ANTICIPATES REQUIRING DAYTIME ACCESS ON A SATURDAY.

5. AT NO TIME IN ANY PHASE OF THE WORK SHALL ANY TWO ADJACENT INTERSECTIONS BE BLOCKED AND/OR UNDER CONSTRUCTION. THE CONTRACTOR SHALL SCHEDULE THE WORK IN THE INTERSECTIONS ACCORDINGLY AS INCIDENTAL TO THE CONTRACT.

6. THE EXACT LOCATION AND SPACING OF ALL SIGNS AND DEVICES SHALL BE ADJUSTED TO FIT CONDITIONS AS APPROVED BY THE ENGINEER.

7. ALL SIGNS SHALL BE 48" X 48" UNLESS OTHERWISE NOTED.

8. ALL TYPE III BARRICADES SHALL BE 8-FEET WIDE.

9. THE CONTRACTOR SHALL COVER ANY SIGN CONFLICTING WITH THE TRAFFIC CONTROL IN OPERATION AS NEEDED OR AS DIRECTED BY THE ENGINEER. COVERING OF SIGNS, AND BAGGING OF SIGNALS IS INCIDENTAL TO THE "TRAFFIC CONTROL" BID ITEM. AFFECTED SIGNS SHALL BE RESTORED TO PRE-CONSTRUCTION CONDITION AS INCIDENTAL TO THE "TRAFFIC CONTROL" BID ITEM.

10. SIGNS WHICH WILL BE IN PLACE LESS THAN 7 CONTINUOUS DAYS AND NIGHTS MAY BE MOUNTED ON PORTABLE SUPPORTS.

11. THIS DRAWING IS INFORMATIONAL ONLY AND PROVIDES GUIDANCE TO THE LEVEL OF TRAFFIC CONTROL QUALITY NECESSARY. THIS DRAWING CANNOT BE USED AS PART OF THE CONTRACTOR'S TRAFFIC CONTROL SUBMITTAL. THE CONTRACTOR SHALL BE RESPONSIBLE FOR PREPARING A TRAFFIC CONTROL PLAN AND OBTAINING WRITTEN APPROVAL OF THAT PLAN FROM THE ENGINEER AS INCIDENTAL TO THE "TRAFFIC CONTROL" BID ITEM.

12. EXTRA SIGNS AND BARRICADES SHALL BE USED AS DIRECTED BY THE ENGINEER AND PAID UNDER THEIR RESPECTIVE BID ITEMS, IF PROVIDED. IF NO ADDITIONAL BID ITEMS ARE PRESENT IN THE CONTRACT, ADDITIONAL SIGNS DIRECTED BY THE ENGINEER ARE INCIDENTAL TO THE "TRAFFIC CONTROL" BID ITEM.

TEMPORARY "NO PARKING" SIGNS

TYPE 1

TYPE 2

TYPE 3

HATCHING KEY

- NO TRUCKING, STAGING, OR CONSTRUCTION ACCESS
- PHASE 1 STAGING AREAS AND LIMITS
- PHASE 2 STAGING AREAS AND LIMITS
- VEHICLE DETOUR

DATE	DESCRIPTION

CITY OF WAUWATOSA
ENGINEERING SERVICES DIVISION

TRAFFIC CONTROL PLAN

N. 115TH ST.

CONTRACT:	23-07
FILE NO:	15-1075
DRAWN BY:	RPC
CHECKED BY:	XXX
SCALE:	N.T.S.

T01

GENERAL NOTES

1. ALL SIGNS SHALL BE MOUNTED AT HEIGHTS AND LOCATIONS WHICH ALLOW FOR CLEAR VISIBILITY.
2. SIGNS MAY BE MOUNTED ON EXISTING CITY POLES. MOUNTING METHOD SHALL BE NON-DESTRUCTIVE.
3. CHANGES TO SIZING, TYPES OF SIGNS, NUMBER, AND MOUNTING METHODS SHALL BE APPROVED BY THE ENGINEER.
4. THE EXACT LOCATION AND SPACING OF ALL TRAFFIC CONTROL DEVICES SHALL BE ADJUSTED TO FIT FIELD CONDITIONS AS APPROVED AND/OR DIRECTED BY THE ENGINEER.
5. ALL SIGNING AND TRAFFIC CONTROL SHALL BE INCIDENTAL TO THE TRAFFIC CONTROL ITEM UNLESS OTHERWISE NOTED IN THE BID TAB.
6. THE TRAFFIC CONTROL AS SHOWN IS FOR BIDDING PURPOSES, AND IS THE MINIMUM WHICH WILL BE REQUIRED. THE CONTRACTOR SHALL ADJUST TRAFFIC CONTROL AS NECESSARY DURING CONSTRUCTION AS INCIDENTAL TO THE CONTRACT.

48" X 48"
1

60" X 30"
2

60" X 30"
4

48" X 48"
3

60" X 30"
5

HATCHING KEY

- NO TRUCKING, STAGING, OR CONSTRUCTION ACCESS
- PHASE 1 STAGING AREAS AND LIMITS
- PHASE 2 STAGING AREAS AND LIMITS
- VEHICLE DETOUR

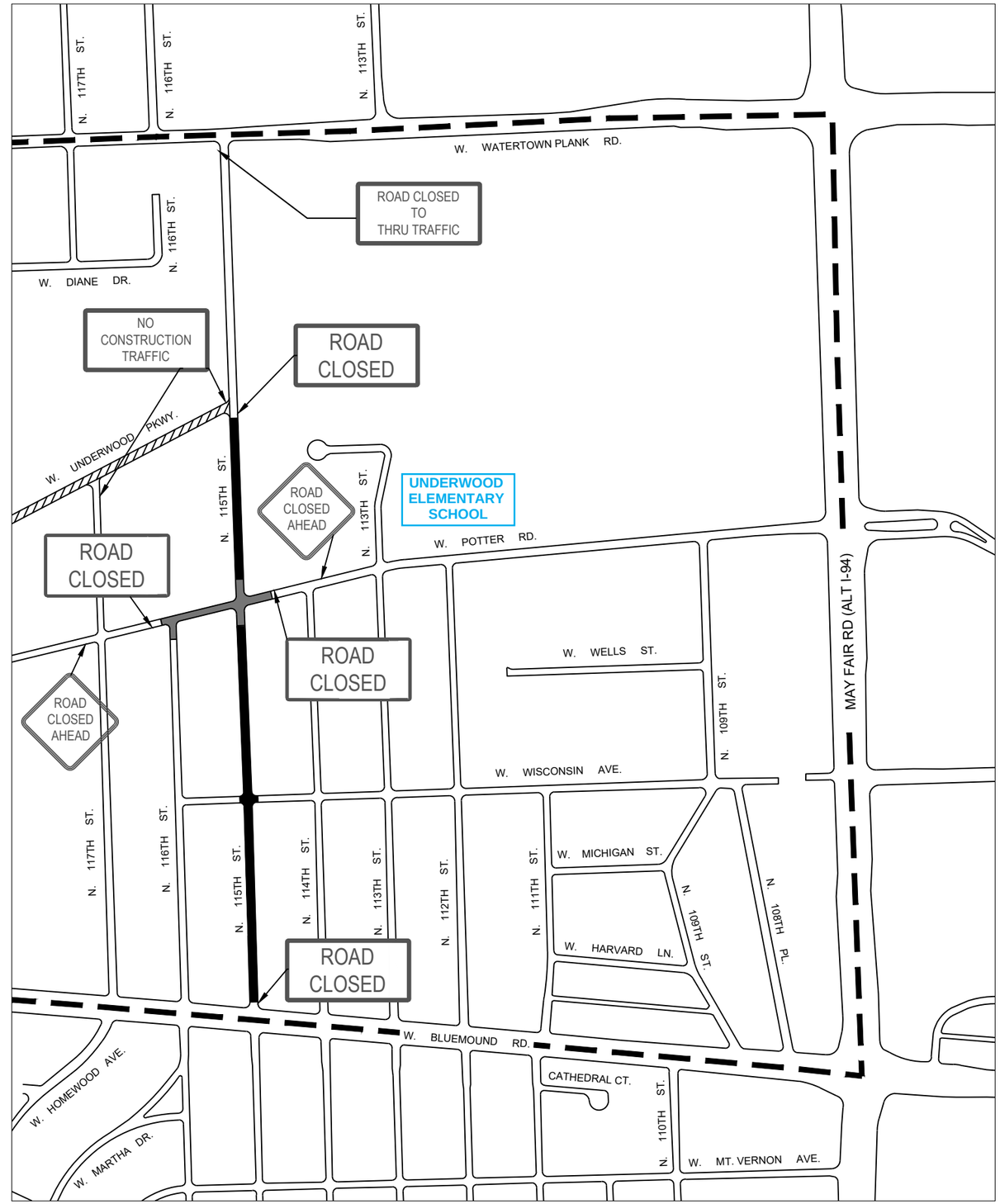

DATE	DESCRIPTION

CITY OF WAUWATOSA
ENGINEERING SERVICES DIVISION

TRAFFIC CONTROL PLAN

N. 115TH ST.

CONTRACT: 23-07
FILE NO: 15-1075
DRAWN BY: RPC
CHECKED BY: XXX
SCALE: N.T.S.

T2

FILE NAME : S:\DEPARTMENT FOLDERS\ENGINEERING\ACAD_PROJECTS\23-07 115TH STREET\SHEETSPLAN\TRAFFIC CONTROL.DWG
LAYOUT NAME - Signing
PLOT DATE : 4/12/2023 2:26 PM
PLOT BY : JENNIFER SCHROEDER